AD-A188 972 IMPACT DAMAGE TOLERANCE OF A CARBON FIBRE COMPOSITE LAMINATE(U) ROYAL AIRCRAFT ESTABLISHMENT FARNBOROUGH (ENGLAND) G DOREY ET AL. MAY 84 RAE-TR-84049 1/1

UNCLASSIFIED DRIC-BR-93442 F/G 11/4 NL

END

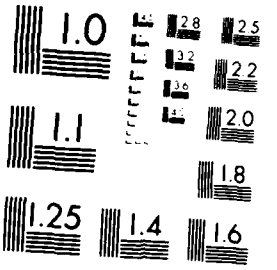

MICROCOPY RESOLUTION TEST CHART
NATIONAL BUREAU OF STANDARDS 1963-A

BR 93442 (2)

GARTEUR OPEN

TR 84049

ICAF Doc No 1620

UNLIMITED

16.9.86 DS

DTIC FILE COPY

TR 84049

AD-A188 072

ROYAL AIRCRAFT ESTABLISHMENT

Technical Report 84049

May 1984

GARTEUR/TP-007

IMPACT DAMAGE TOLERANCE OF A CARBON FIBRE COMPOSITE LAMINATE

by

G. Dorey
P. Sigëty
K. Stellbrink
W. G. J. 't Hart

DTIC
ELECTE
JAN 1 5 1988
S D
H

Procurement Executive, Ministry of Defence
Farnborough, Hants

UNLIMITED

DISTRIBUTION STATEMENT A
Approved for public release;
Distribution Unlimited

GARTEUR OPEN

87 12 29 020

UDC 621-419 : 621-426 : 661.66-426 : 539.537

ROYAL AIRCRAFT ESTABLISHMENT

Technical Report 84049
GARTEUR/TP-007

Received for printing 3 May 1984

IMPACT DAMAGE TOLERANCE OF A CARBON FIBRE COMPOSITE LAMINATE

by

G. Dorey
P. Sigéty*
K. Stellbrink**
W. G. J. 't Hart†

SUMMARY

An investigation was carried out, under the auspices of GARTEUR, at four European aerospace research establishments as the first phase of a collaborative research programme on impact damage tolerance of composite materials. Laminates, from a common batch of material and having a $[0\ 90\ 0\ \pm 45\ 0]_s$ lay-up, were impacted by dropweight and residual strengths were measured in tension and compression. Post impact fatigue strengths were measured under fully reversed loading for specimens containing barely visible impact damage. The impact damage significantly reduced the static compressive strength but subsequent fatigue loading produced little further reduction in strength and the fatigue strength at 10^6 cycles was similar to that for non-impacted specimens. All four establishments produced similar results and in Phase 2 they will study in more detail a wider range of materials and test parameters.

Departmental Reference: Materials/Structures 85

Copyright
©
Controller HMSO London
1984

* at ONERA Chatillon France
** at DFVLR Stuttgart Germany
† at NLR Emmeloord Holland

DTIC COPY INSPECTED 6
A-1

LIST OF CONTENTS

		Page
1	INTRODUCTION	3
2	MATERIALS	3
3	DROPWEIGHT IMPACT	4
4	STATIC TESTS	5
5	FATIGUE TESTS	6
6	DAMAGE GROWTH AND FRACTURE SURFACES	7
7	DISCUSSION	7
8	CONCLUSIONS	9
Tables 1 to 7		10
References		15
Illustrations		Figures 1-31
Report documentation page		inside back cover

1 INTRODUCTION

A GARTEUR action group, comprising DFVLR of Germany, NLR of Holland, ONERA of France and RAE of England, was established to investigate the impact damage tolerance of composite materials. Separate programmes at these establishments had previously compared the effects of impact damage, simulating dropped tools and runway stones, with indenter damage and machined notches, in a variety of composite materials measuring residual static strengths and stiffnesses and post impact fatigue properties. In general it had been found that broken fibres significantly reduced tensile strengths whilst delaminations reduced compressive strengths. For penetrated laminates the damage had a similar effect to that of machined holes of a similar size, but barely visible impact damage (BVID) could sometimes be more severe than artificially simulated defects.

Initially the action group sorted out test techniques to produce impacts, to detect and characterise the damage and to measure the strengths of damaged laminates, in particular the design of anti-buckling guides for compressive testing. Eventually the group focussed on the problems of BVID in carbon fibre reinforced epoxy resin laminates and the possibility of damage growth becoming critical under fatigue loading. Phase 1 was to be a 'round robin' with standardised damage in a common batch of material to check that the four laboratories produced consistent results. Phase 2 could then study a wider range of materials and test parameters with greater confidence in the comparability of the results.

This report gives the results of Phase 1, collating RAE data with those from the other three laboratories[1-3]. A single batch of carbon fibre pre-preg was divided and sent to the four laboratories who had it layed up and moulded into $[0\ 90\ 0\ \pm 45\ 0]_s$ laminates. The standard level of BVID was established by preliminary testing and was used by all four sites. Residual strengths were measured in tension and compression, and post impact fatigue properties were measured under fully reversed axial loading ($R = -1$) so as to test the susceptibility of the material to damage under as wide a range of loading as possible. Complementary investigations during and after the common programme of testing are reported for the different laboratories.

2 MATERIALS

The preimpregnated material was obtained from Ciba-Geigy (UK) Ltd, designated Fibredux 914C-TS-5, batch number 75/50131. It comprised high strength carbon fibres (T300) in an epoxy resin (BSL 914-C), in the form of warp sheet 300 mm wide with a moulded thickness of 0.125 mm and a nominal fibre volume fraction of 60%. RAE conducted some parallel tests on a second high strength fibre (XAS) in the same epoxy resin.

DFVLR moulded a unidirectional sheet from sixteen plies of material, 2 mm thick, and tested it in three point bend to check the quality of the material. The results are given in Table 1. The relatively high values of ILSS and transverse flexural strength indicated that the moulding was satisfactory, although the fibre volume fraction was slightly low. The longitudinal flexural strength indicated that the fibre strength was satisfactory but the longitudinal Young's modulus was on the low side.

84049

Multidirectional laminates were made in each of the four countries for the main part of the programme. The lay-up was $[0\ 90\ 0\ \pm45\ 0]_s$, 12 plies thick having 50% 0° plies and containing 45° plies for torsional stiffness and 90° plies for lateral stiffness, typical of aircraft skin lay-ups. The laminates were moulded in autoclaves at RAE, DFVLR and NLR and in a press at ONERA, to the manufacturer's recommendations: 1 hour cure at 170°C and 4 hours post cure at 190°C. The NLR laminates were approximately 1.5 mm thick with fibre volume fractions of 62%, but the other three laboratories produced laminates approximately 1.8 mm thick with fibre volume fractions of about 52%. Polished cross sections of typical laminates are shown in Fig 1. It can be seen that in all cases the mouldings were satisfactory with few voids.

3 DROPWEIGHT IMPACT

A dropped weight is a simple, reproducible means of causing impact damage, typical of a dropped hand tool, but the type and extent of the damage depends on the test geometry[4]. The laminates were impacted before being cut into test specimens (250 mm × 50 mm), except at NLR where, by mistake, specimens were cut out first. The laminates were supported horizontally over a steel cylindrical support, 100 mm internal diameter and 140 mm external diameter and clamped by means of a similar cylinder. The impactor was dropped through 1 m (impact velocity 4.43 m/s) and had a nose diameter of 10 mm. Typical arrangements are shown in Fig 2 (ONERA) and Fig 3 (DFVLR). RAE did some preliminary tests in which the mass of the dropped weight was varied. It was found that a mass of 306 gm (incident energy 3 J) caused damage that was barely visible, had little effect on tensile strength but caused a significant decrease in compressive strength (see section 4). Furthermore the lateral extent of the damage was less than 1/3 of the subsequent specimen width. Thus 3 J was chosen as the standard incident energy. The weight rebounded to a height of approximately 0.25 m, thus retaining 0.75 J energy and imparting 2.25 J to the specimen and its supports. Both ONERA and DFVLR instrumented their equipment. ONERA recorded the specimen oscillating at 55 Hz with a central displacement of about 4 mm. The DFVLR results are shown in Fig 4 showing the acceleration, velocity and displacement of the weight during impact, indicating a displacement of 4.5 mm, a maximum load of 1.58 kN and an absorbed energy of 1.63 J.

For 3 J incident energy, the damage visible on the surface was a very slight dent on the front face and a split on the back face, 20 mm to 25 mm long, parallel to the fibres. Damage at a higher level of incident energy, 8 J, is shown in Fig 5 for both T300/914 and XAS/914. Both exhibit a tough fibrous fracture which is contrasted with the brittle behaviour of a similar $[0\ 90\ 0\ \pm45\ 0]_s$ laminate made over 10 years previously, with an excessive bond strength between the carbon fibre and the epoxy resin.

The panels were examined by ultrasonic C-scan in all four laboratories. Fig 6 shows the RAE results for various levels of incident energy, showing the areas of damage elongated in the direction of the 0° fibres. The reproducibility of the damage is shown in Fig 7 (ONERA) and Fig 8 (DFVLR) where delaminated areas were 212 mm^2 (CV 19%). Because the NLR specimens were more compliant under impact loading (thinner laminates and less rigid supports) more of the incident energy was taken in elastic deformation and

the areas of damage were smaller (about 70 mm^2); a number of specimens were damaged using 3.5 J incident energy but the areas of damage were not significantly greater than for 3 J.

Cross sections were taken through the damaged areas and examined by optical microscope, Fig 9 (DFVLR) and Fig 10 (ONERA). These show multiple delaminations through the thickness the extent of the delaminations increasing towards the back face and extending further in the 0° direction. In Fig 10a it can be seen that the delaminations occurred at the ±45 interface and on the impact side of all the 0° plies. Since the impact supports were circular all the plies were radial through the damage area. The asymmetry arose therefore because of the greater stiffness in the 0° direction, due to the greater number of 0° plies and the 0° plies on the outside, thus causing greater stresses in this direction. The extent of delamination associated with individual interfaces can be seen more clearly in translucent materials such as glass fibre or aramid fibre laminates[5], in which the delamination extended on the impact side of each ply in the direction of the stiff fibres in that ply. Also in Figs 9 and 10 can be seen transverse cracks in each ply angled at approximately 45° to the laminate plane so as to be perpendicular to the tensile component of the shear stress associated with the flexure.

4 STATIC TESTS

After impact and inspection the panels were cut into specimens 250 mm × 50 mm, so that the damage was at the centre, and tested in either axial tension or axial compression. In compression an anti-buckling device was used to prevent gross buckling of the specimen but to allow local buckling of damaged plies. All four laboratories used similar anti-buckling devices based on a design by DFVLR and shown in Figs 11 to 14. The side plates, coated with PTFE to reduce friction, provided edge restraint approximately 12 mm in from each side over most of the gauge length, leaving a gap of only a few mm to allow for compressive strain. The T-pieces were used so that the small gap did not extend in a straight line across the specimen. These T-pieces had roughened surfaces (except on the tongue of the T) so that they could be clamped on to the specimen in the test machine's grips, without having to use adhesive. It was found that the T-pieces had to be restrained by the cross members (see Figs 11 and 13) to prevent out-of-plane movement. Thus the unrestrained portion of the gauge length was 70 mm × 26 mm with the damaged area approximately 25 mm × 10 mm at the centre. NLR tested some undamaged specimens in compression with gauges on each side (see Fig 14) and found that the unrestrained portion buckled for applied loads greater than about 33 kN corresponding to a strain of 0.55%. For the thicker specimens used by the other three laboratories this would occur at about 0.79% strain or 530 MPa applied stress. Fig 15 shows some results for damaged specimens tested in tension; the load strain curves were almost identical for the two strain gauge locations, confirming that the delamination damage had had negligible effect on the local in-plane tensile stiffness.

84049

RAE had damaged some of the laminates over a range of incident dropweight energies and the residual tension and compression strengths are shown in Fig 16. The results for XAS 1914 and T300/914 were very similar. The tensile strength was not affected much by

the delamination damage that occurred up to 3 J incident energy, but the fibre damage at 4 J and above caused significant reductions in strength. The delamination however did reduce the compressive strength for incident energies greater than 1 J. From these results it was decided that the standard damage for the subsequent fatigue tests would be that caused by 3 J incident energy. Tables 2 to 4 give the results of the static tests. There was reasonable agreement for the compressive strength: 590 ±50 MPa for undamaged specimens and 340 ±40 MPa for damaged specimens. For the tensile strengths there were much greater differences between the laboratories for both damaged and undamaged specimens: 630 MPa to 930 MPa for undamaged specimens and 490 MPa to 960 MPa for damaged specimens. It is assumed that these differences in tensile strengths found by the laboratories was caused by differences in stress concentrations associated with gripping the test specimens, and this is supported by photographs of broken specimens shown in section 6.

5 FATIGUE TESTS

Fatigue tests were carried out on both undamaged specimens and on specimens containing the damage produced by 3 J incident dropweight energy. The loading was fully reversed axial loading (R = -1) applied by servo-hydraulic fatigue machines, using the anti-buckling devices described in section 4. RAE and NLR used hydraulic grips whereas ONERA and DFVLR used mechanical grips. The first 100 cycles were at a frequency of 1 Hz, while the load was adjusted to the required level. The frequency was then increased to 5 Hz for the remainder of the test, higher frequencies being avoided so as not to raise heating problems. All the failures occurred during the compression half cycle, since the specimens were weaker in compression than in tension. The damaged specimens failed through the damaged region. Many of the undamaged specimens failed within the gauge length but some showed evidence of fretting round the end T-pieces with failures occurring in this region, and at NLR, these were at relatively short fatigue lives.

The results are given in Tables 5 to 7 and plotted in Figs 17 to 20. The results for all four laboratories are plotted together in Fig 21. It can be seen that there is much better agreement for the fatigue results than for the static results. The values for undamaged specimens fall from about 600 MPa at short lives to about 300 MPa at 10^7 cycles. The slope of the curve for damaged specimens shows less degradation, from just over 300 MPa at short lives to over 200 MPa at 10^6 cycles.

The RAE results shown in Fig 17 indicate that for the undamaged specimens there was very little difference between XAS/914 and T300/914. For damaged specimens, the slightly greater area of delamination in XAS/914 (see Fig 6) led to slightly lower fatigue strengths, but for both materials there was no evidence of any further reduction in fatigue strength up to 10^6 cycles. The NLR results (Fig 18) showed no significant difference between the specimens impacted by 3 J and those impacted by 3.5 J. The ONERA results (Fig 19) show, for undamaged specimens, that specimens failing in the gauge length and those failing near the ends had similar fatigue lives. The DFVLR results (Fig 20) show the importance of the restraints on the T-pieces to avoid out-of-plane movement; the open circles for unrestrained ends all showed lower fatigue lives than the solid circles for specimens with restrained ends.

DFVLR monitored the stiffness of the specimens electro-optically by recording the root mean square elongation of a 50 mm section of gauge length. With undamaged specimens no change in stiffness was detected, but with damaged specimens the stiffness reduced towards the end of the fatigue life as shown in Fig 22. This was mainly due to an increase in compressive compliance. If these results were plotted on a linear scale, the reduction in stiffness would commence at about half the eventual lifetime. This reduction in stiffness towards the end of the fatigue life of damaged specimens was sufficient to stop the test on the NLR machine. These specimens were then tested statically in tension; although there had been damage growth leading to a reduction in compressive stiffness, there was no apparent reduction in residual tensile strength.

6 DAMAGE GROWTH AND FRACTURE SURFACES

ONERA monitored the damage using X-rays and a radio-opaque dye. Fig 23 shows the damage for two specimens, one immediately after impact and the other after 10^6 cycles. There is no apparent evidence of any damage growth, apart perhaps from some small cracks in the 0° direction. There was no evidence of any edge cracking, which has been observed with other stacking sequences[6]. Calculations at ONERA, of the edge stresses expected from the present stacking sequence, are shown in Fig 24. The maximum stress was for σ_{zz}, the through-thickness normal stress, but this was only about 5% of the applied stress and would not be expected to cause cracking.

The NLR specimens that had not failed in fatigue were inspected by ultrasonic C-scan and the scans are shown in Fig 25. Comparing these results with that shown in Fig 15 it can be seen that, with the exception of specimen 2A3, there is very little evidence of major delamination, even though specimens 2A6, 2A9 and 2A10 had indicated a reduction in stiffness: there was however a small amount of damage growth in the 0° direction.

Photographs of fractured specimens are shown in Figs 26 to 31. The static tension specimen shown in Fig 26 (DFVLR) shows evidence of failure from a stress concentration at the end grip; this might explain why DFVLR did not get any static tensile strengths above 530 MPa. Fig 27 shows static tensile specimens for XAS/914 and T300/914; as in the case of C-scans (Fig 6) and fatigue strength (Fig 17) there is evidence of slightly more splitting in the case of XAS/914 even though there was no significant difference in strength. Fig 28 shows ONERA specimens which indicate that fatigue specimens suffer more splitting parallel to the fibres than specimens failed statically in tension. This is also shown for compression specimens, Fig 29. The fracture surfaces found by DFVLR after fatigue testing show that non-impacted specimens had relatively smooth fracture surfaces with much evidence of compression failures (Fig 30) while the impacted specimens showed more splitting and delamination (Fig 31).

7 DISCUSSION

Static tests were conducted at strain rates that caused failure in a time of the order of 1 minute. This was much slower than the strain rate of the fatigue tests where the first peak stress was reached in 0.25 second. For carbon fibre laminates tested in

840349

tension this would not cause much effect, whereas for GRP there is a significant effect of strain rate. However, in compression, the matrix properties could have more effect and strain rate might be significant.

The static tensile strengths measured were very different for the four laboratories. NLR measured the highest strengths, and the smaller extent of damage in their impacted specimens caused no apparent reduction in strength. DFVLR recorded the lowest values for undamaged strength with ONERA and RAE getting intermediate values. There was better agreement for the tensile strengths of damaged specimens but this was understandable as failures occurred through the damaged area and thus the results would be influenced less by other stress concentrations. In any further collaboration the source of this scatter in tensile strengths should be identified.

In compression the higher values of strength should be viewed as minimum values because of NLR's findings on buckling: for NLR, strengths above about 450 MPa and for the other three laboratories strengths above about 530 MPa. However the agreement between the four laboratories was good and in future collaborations thicker specimens should be used to avoid buckling. The values for impact damaged specimens were all well below the buckling level and again the agreement between the four laboratories was good. In fatigue testing the four laboratories obtained very similar results. The undamaged specimens showed fatigue strengths which fell from about 600 MPa to about 300 MPa at 10^6 cycles. This is typical of fatigue under compression loading; under tension fatigue this lay-up would have shown a smaller decrease in fatigue strength. But there was some evidence of damage being caused by the end fittings and the anti-buckling device, so the long term fatigue strength could possibly be better.

The damaged specimens exhibited less decrease in strength on fatigue loading, which together with the evidence from X-rays, C-scans and stiffness measurements showed that little damage propagation occurred. This is similar to the effects of tension fatigue of notched CFRP, where local splitting near the notch reduces the stress concentration and can cause increases in residual strength. With compression fatigue or fully reversed loading on specimens containing damage in the form of delamination it could be that local softening could reduce the stresses near the damage and merely increase the net section stress. This would be supported by the similar net section fatigue strengths exhibited by damaged and undamaged specimens at long lifetimes. It is not clear whether increases in residual compressive strength can result, as in tension, but this will be investigated in future collaboration in Phase 2.

The relatively flat S-N curves for damaged specimens under reversed loading, similar to those for tension fatigue, supports the design principle that strain limits imposed to allow for reductions in static strength, due to notches or BVID, also allow for fatigue effects. However the results obtained here are for only one stacking sequence and could be rather specific; the similarities between XAS/914 and T300/914 indicate that they are not so specific for fibre type. More investigations of parameters such as lay-up, layer thickness and resin will be needed before more general conclusions can be drawn.

As modifications are made in materials properties to improve the static [illegible] damaged laminates, for example by using higher strain fibres[illegible], improved [illegible] laminates[5], it will be important to determine whether the post damage fatigue strength has also been improved. If not, then fatigue strengths might become a more significant feature of the design of composite structures.

8 CONCLUSIONS

These carbon fibre/epoxy resin laminates are susceptible to low energy or "[illegible]" impact damage, especially when tested in compression. The threshold energy for reduction in compressive strength was about 1 J whereas in tension it was about 4 J. Barely visible impact damage, comprising multiple delaminations and transverse cracks parallel to the fibres, had little effect on tensile strength but reduced the compressive strength by about 40%.

Fatigue behaviour under fully reversed axial loading was dominated by the compressive loading. Non-impacted specimens had a fatigue strength at 10^5 cycles approximately one half that of the short life strength. Although the barely visible impact damage caused a marked reduction in static compressive strength, there was little damage growth and little further reduction in fatigue strength. At 10^6 cycles the net section fatigue strength for damaged specimens was similar to that for non-impacted specimens.

The four laboratories obtained considerable variation in the static tensile strength of undamaged specimens. There was better agreement in the static compressive strength, and in the tensile and compressive strengths of impact damaged specimens. There was good agreement in all the fatigue results. There was sufficient confidence in the consistency of the results from the four laboratories to proceed to Phase 2 of the collaborative research programme in which a wider range of material and test parameters will be studied.

84049

Table 1

FLEXURAL PROPERTIES OF UNIDIRECTIONAL CARBON FIBRE [illegible]
MEASURED IN THREE POINT BEND [illegible]

		Failure	Ultimate
Interlaminar shear strength	MPa (CV)	[illegible]	[illegible]
Longitudinal flexural strength	MPa (CV)	[illegible]	[illegible]
Longitudinal Young's modulus	GPa (CV)	103.7 (initial) (4.8%)	[illegible] (secant) [illegible]
Transverse flexural strength	MPa		[illegible]
Transverse Young's modulus	GPa		7.5 (secant)
Fibre volume fraction		51.5% to 57%	

Table 2

STATIC STRENGTH PROPERTIES OF UNDAMAGED AND IMPACT DAMAGED
$[0\ 90\ 0\ \pm 45\ 0]_s$ CARBON FIBRE LAMINATES (NLR)

Specimen	Damage J	Load kN	Strength MPa	Strain %	Secant modulus GPa 0-15 kN	Secant modulus GPa 0-40 kN
1A1	-	70	932	1.06	73	81.6
1A2	-	61	813	0.99	74	81.5
1A3 compr.	-	47 32.5 buckl	625	0.53	75	
1A4 "	-	43 41 buckl	572		70	
2A11	3	72.6	970	1.18		79.5
2A12	3	68.6	913	1.09		81.2
2B11	3.5	70.0	935	1.12		82.2
2B12	3.5	65.5	872	1.04		82.7

Specimen cross section: 75 mm^2

Table 3

STATIC STRENGTH PROPERTIES OF UNDAMAGED AND IMPACT DAMAGED

[0 90 0 ±45 0] CARBON FIBRE LAMINATES (ONERA)

		Specimen	Strength MPa*
Undamaged	Tension	BAB 1 K2	840
		BAB 1 K3	830
		BAB 1 K1	783
	Compression	BAB 1 H1	565
		BAB 1 K4	571
		BAB 1 K5	543
		BAB 1 K6	567
Damaged 3 J	Tension	BAB 1 J2	605
		BAB 1 H3	597
	com-pression	BAB 1 I5	364
		BAB 1 J5	334

* *Calculated for a mean thickness of 1.75 mm*

Table 4

STATIC STRENGTHS OF UNDAMAGED AND IMPACT DAMAGED

$[0\ 90\ 0\ \pm45\ 0]_s$ CARBON FIBRE LAMINATES (RAE)

	Tension			Compression		
	Width mm	Impact J	Strength MPa	Width mm	Impact J	Strength MPa
T300/914	50	0	666	50	0	569
	"	"	667	"	"	648
	"	"	732			
	30		655	50	3	318
	20	"	679	"	"	328
				"	"	380
	50	3	548	"	"	345
	"	"	482			
XAS/914	50	0	647	50	0	564
	"	"	537	"	"	605
	"	"	681			
	30	"	567	50	3	278
	20	"	762	"	"	357
	50	3	586	"	"	327
	"	"	528			

84049

Table 5

FATIGUE RESULTS (R = -1) FOR UNDAMAGED AND IMPACT DAMAGED

$[0\ 90\ 0\ \pm 45\ 0]_s$ CARBON FIBRE LAMINATES (NLR)

Specimen	Load P kN	Stress MPa	Number of cycles
1B6	35.4	471	3560
1B7	35.4	471	9280
1A8	33.7	450	5780
1B4	33.7	450	21730
1A9	31.9	425	6220
1A7	31.9	425	9850
1A6	30.0	400	32540
1B3	30.0	400	41780
1B2	28.1	375	35450
1A5	28.0	373	184320
1B1	26.2	350	86680
1B5	26.2	350	612650
1B9	24.4	325	256990
1B8	24.4	325	1359000

Specimen cross section: 75 mm^2

Specimen	Damage J	Load P kN	Stress MPa	Number of cycle
2A4	3	24.4	325	3410
2A5	3	24.4	325	4560
2A9	3	24.4	325	119220*
2A1	3	22.5	300	45690
2A3	3	22.5	300	69550
2A10	3	22.5	300	103270
2A6	3	18.7	250	114730
2A7	3	18.7	250	873730
2A2	3	15.0	200	1258300*+
2A8	3	15.0	200	1964500*+
2B10	3.5	24.4	325	51960
2B1	3.5	22.5	300	6730
2B7	3.5	22.5	300	32280
2B2	3.5	20.6	275	104550*
2B8	3.5	20.6	275	118240
2B6	3.5	20.6	275	126410
2B4	3.5	18.7	250	84290
2B3	3.5	18.7	250	1000000+
2B9	3.5	18.7	250	1041000*

+ Untailed

* Residual strength determined after fatigue loading

Table 6

FATIGUE RESULTS (R = - 1) FOR UNDAMAGED AND IMPACT DAMAGED $[90\ 0 \pm 45\ 0]_s$ CARBON FIBRE LAMINATES (ONERA)

	Specimen	Stress MPa*	Number of cycles
Undamaged	BAB 1 L4	514	1480
	BAB 1 L3	514	5323
	BAB 1 J1	486	8922
	BAB 1 J6	486	3176
	BAB 1 F3	457	22790
	BAB 1 F1	457	38580
	BAB 1 F4	429	23070
	BAB 1 E6	429	32870
	BAB 1 E5	400	55400
	BAB 1 I1	371	163910
	BAB 1 F6	314	253440
	BAB 1 G1	314	600440
	BAB 1 E3	343	811550
	BAB 1 G6	314	1035540
	BAB 1 L2	286	1132620
Damaged 3 J	BAB 1 G5	286	50
	BAB 1 G4	286	510
	BAB 1 G2	257	8050
	BAB 1 G3	257	53850
	BAB 1 F2	200	234440
	BAB 1 F5	229	324090
	BAB 1 I4	229	372850
	BAB 1 I3	200	10^6+
	BAB 1 I2	171	10^6+

* Calculated for a mean thickness of 1.75 mm

84049

Table 7

FATIGUE RESULTS (R = - 1) FOR UNDAMAGED AND IMPACT DAMAGED $[0\ 90\ \pm 45\ 0]_s$ CARBON FIBRE LAMINATES (RAE)

	Undamaged		Damaged 3 J	
	Stress MPa	Number of cycles	Stress MPa	Number of cycles
T300/914	600	70	322	96000
	575	20	314	12500
	500	97400	307	119000
	483	5000	304	2760
	402	203000	294	145000
			284	110000
XAS/914	510	900	275	1700
	510	10400	250	45600
	500	2880	250	743000
	500	6390	249	30500
	500	10700	242	940
	500	11500	232	28900
	500	58500	225	201000
	475	7610		
	475	24900		
	450	28500		
	450	58900		
	400	111000		

REFERENCES

No.	Author	Title, etc
1	K. Stellbrink	Impact damage tolerance tests. DFVLR IB435-81/8 (1981)
2	W.G.J. t' Hart	Impact damage tolerance of composite materials. NLR Memorandum SM-81-088C (1981)
3	P. Sigéty	Fatigue après impact de composites carbone-resine. ONERA Rapport Technique 34/7086M (1981)
4	S.M. Bishop G. Dorey	The effect of damage on the tensile and compressive performance of carbon fibre laminates. AGARD-CP-355 (1983)
5	G. Dorey	The use of hybrids to improve composite reliability. DuPont Technical Symposium III Kevlar in Aircraft (1981)
6	T.K. O'Brien	Characterisation of delamination onset and growth in a composite laminate. ASTM-STP-775 (1982)
7	P.T. Curtis	An initial evaluation of the behaviour of a high strain carbon fibre reinforced epoxy. RAE Technical Report to be published
8	J.G. Williams M.D. Rhodes	Effect of resin on impact damage tolerance of graphite/epoxy laminates. ASTM-STP-787 (1982)

84049

a DFVLR 1.76 mm thick

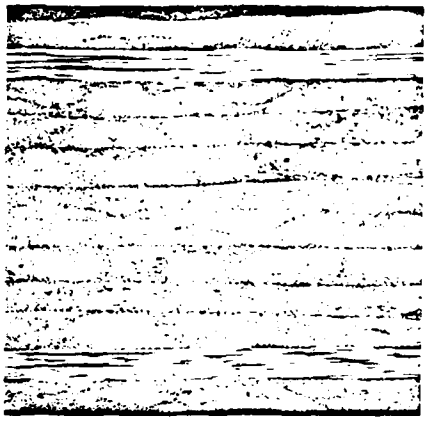

b NLR 1.57 mm thick

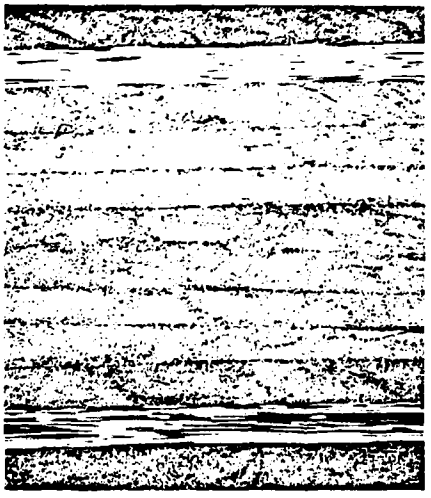

c ONERA 1.87 mm thick

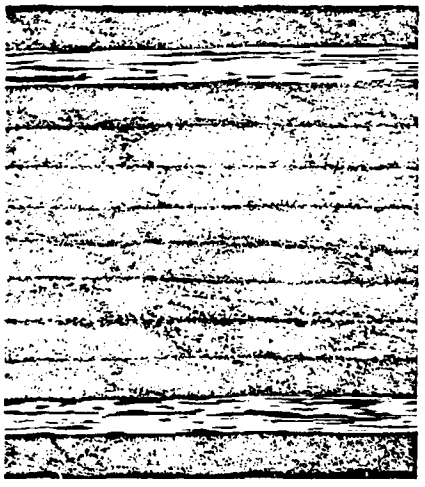

d RAE 1.83 mm thick

TR 84049 C18436

Fig 1a-d Cross sections through the $[0\ 90\ 0\ \pm 45\ 0]_s$ carbon fibre laminates moulded in the four laboratories

Fig 2

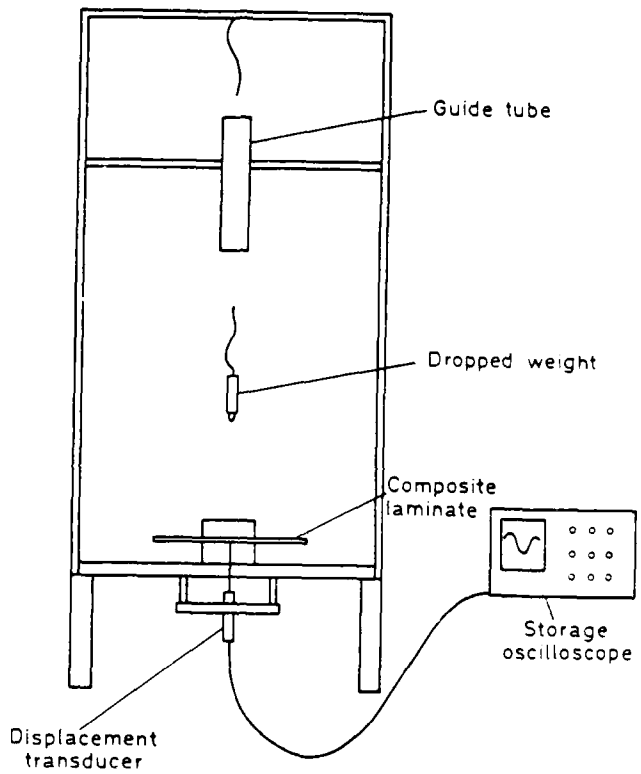

Fig 2 The ONERA apparatus for dropweight impact

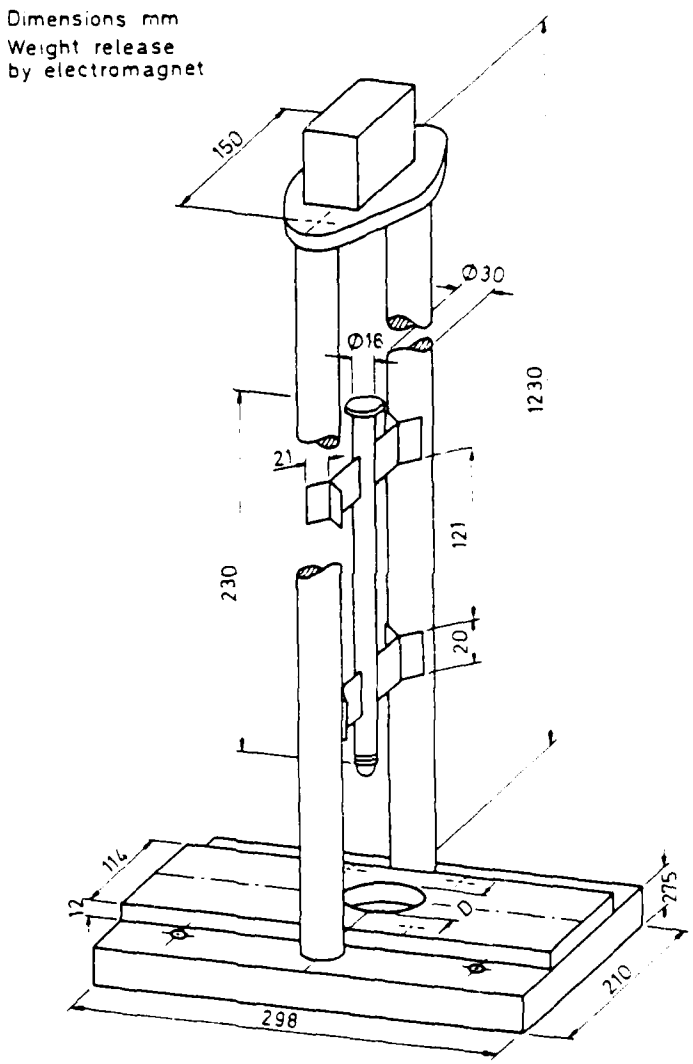

TR 84049

Fig 3 The DFVLR apparatus for dropweight impact

Fig 4

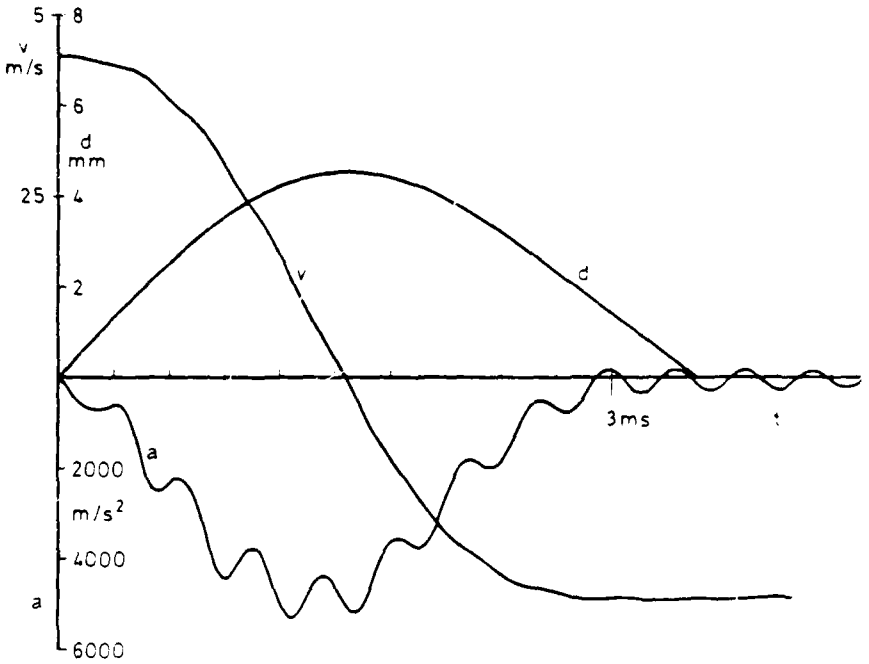

d Displacement
v Velocity
a Acceleration

Dropped mass	300gm	Absorbed energy	1 63J
Drop height	1 0m	Displacement	4 5mm
Kinetic energy	3J	Maximum force	1 58kN

Fig 4 The displacement, velocity and acceleration of the dropped weight during impact (DFVLR)

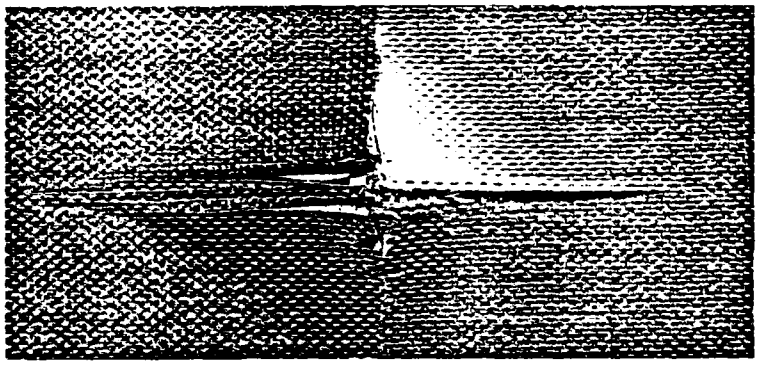

a 10 mm

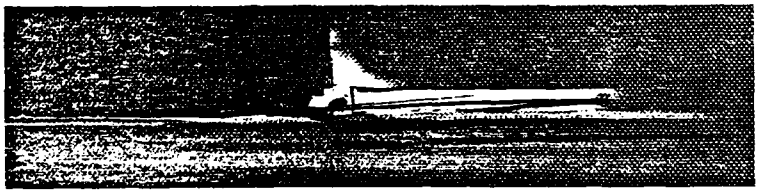

b 10 mm

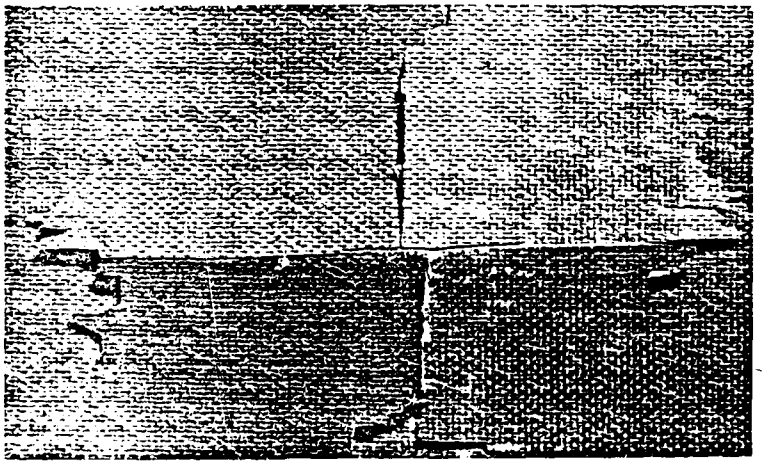

c 10 mm

Fig 5a-c Backface damage on $[0\ 90\ 0\ \pm 45\ 0]_s$ carbon fibre laminates from dropweight impact of 8 J energy (a) T300/914C (b) XAS/914C (c) a brittle CFRP (RAE)

TR 84049 C18437

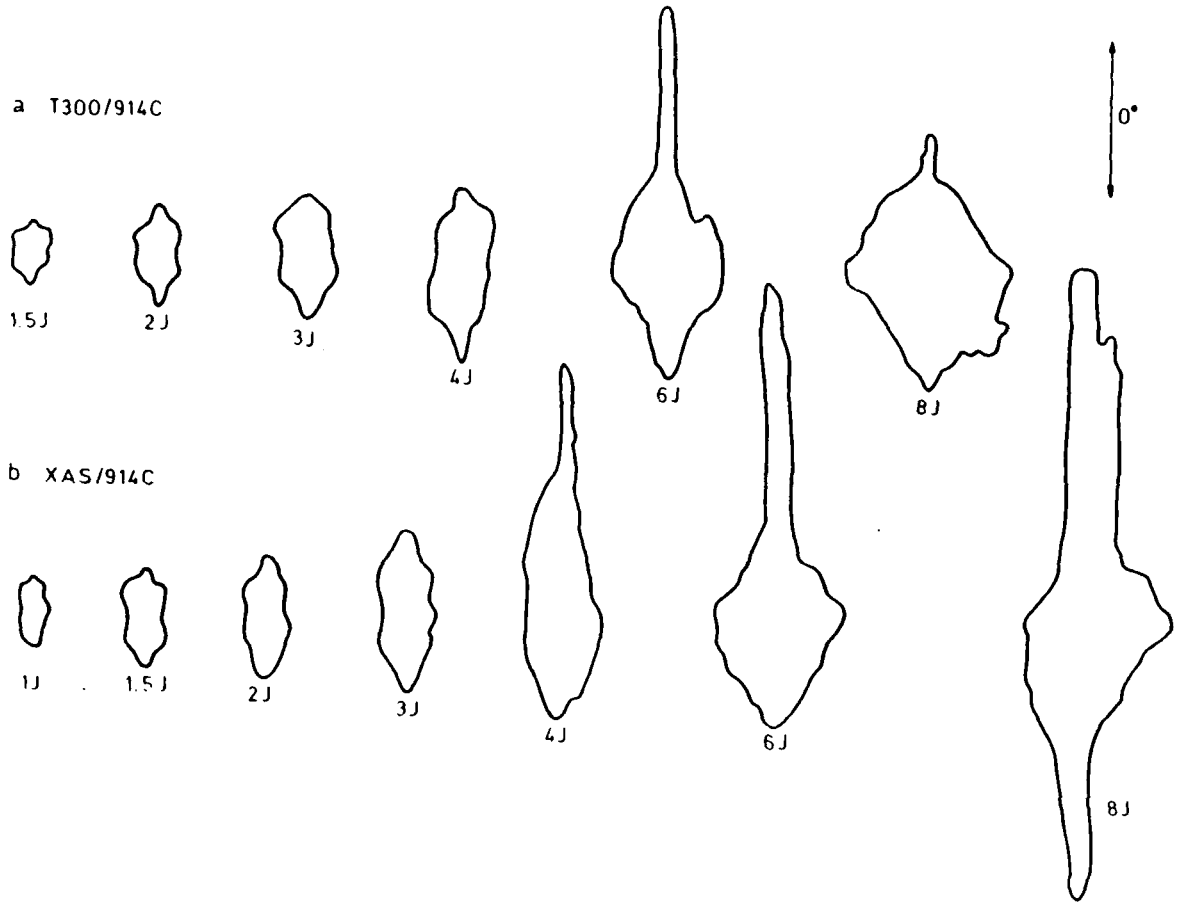

Fig 6a&b Areas of damage measured by ultrasonic C-scan for various levels of incident dropweight energy on $[0\ 90\ 0\ \pm 45\ 0]_s$ carbon fibre laminates (RAE)

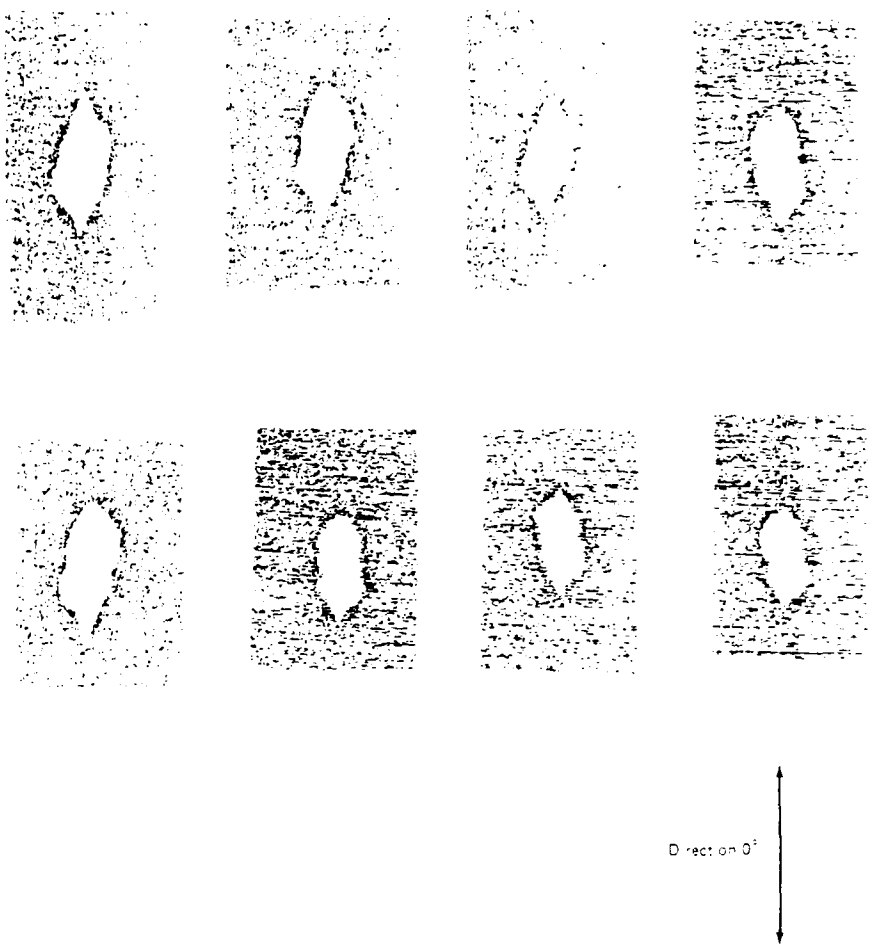

Fig 7 Areas of damage by ultrasonic C-scan for 3 J incident dropweight energy on a $[0\ 90\ 0\ \pm 45\ 0]_s$ carbon fibre laminate (ONERA)

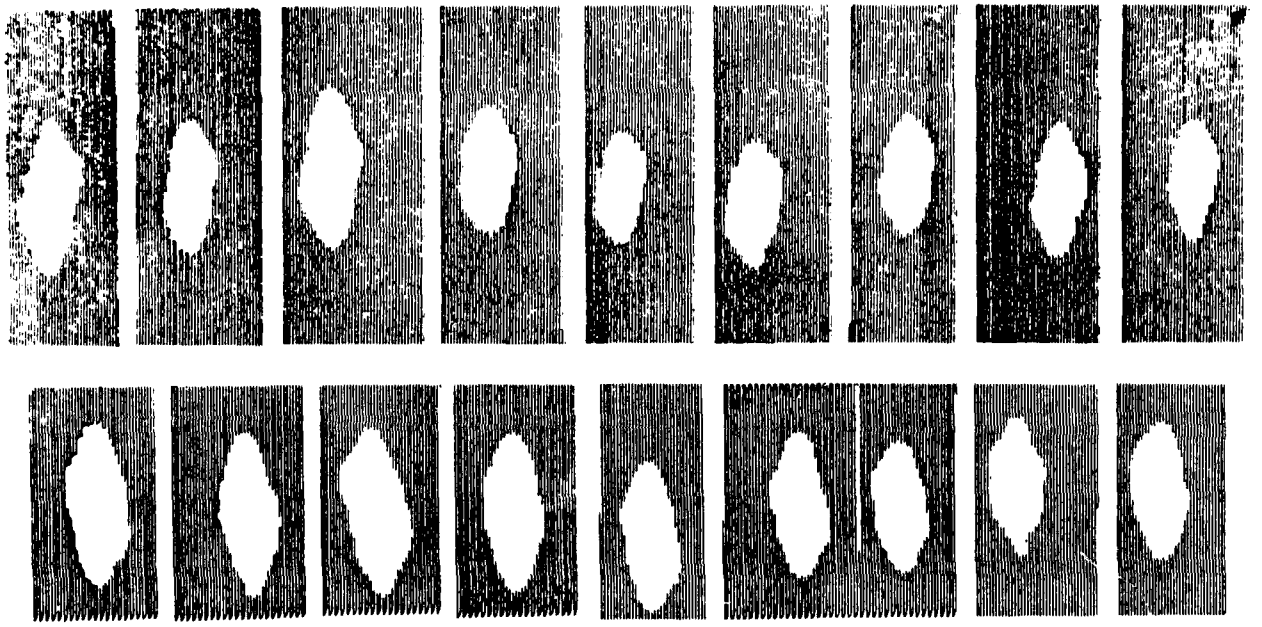

Range of areas	152 mm^2 to 280 mm^2
Mean area	212 mm^2
Coefficient of variation	19%

Fig 8 Areas of damage by ultrasonic C-scan for 3 J incident dropweight energy on a $[0\ 90\ 0\ +45\ 0]_s$ carbon fibre laminate (DFVLR)

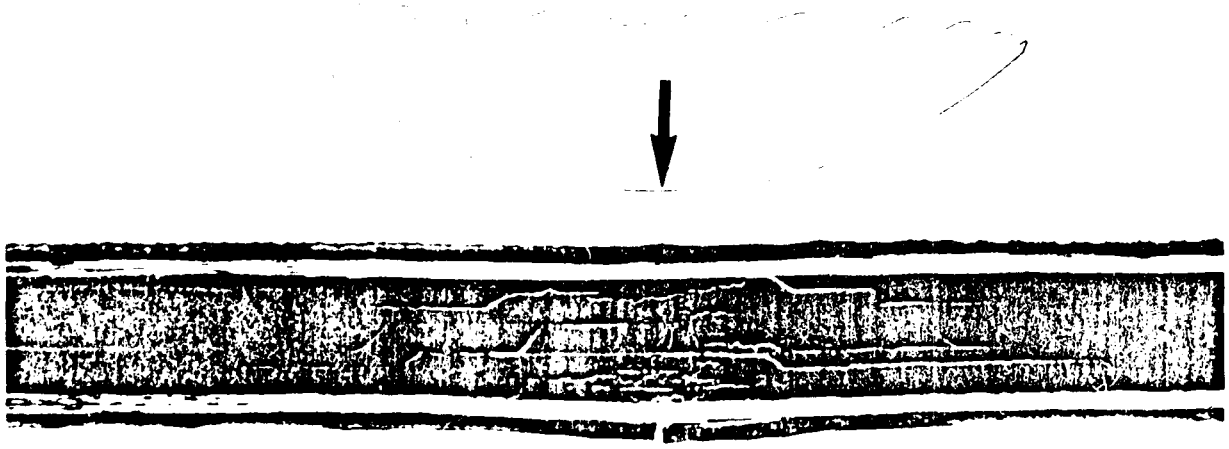

Fig 9 Cross-section through the area of damage caused by 3 J incident dropweight energy on a $[0\ 90\ 0\ \pm 45\ 0]_s$ carbon fibre laminate (DFVLR)

Fig 10

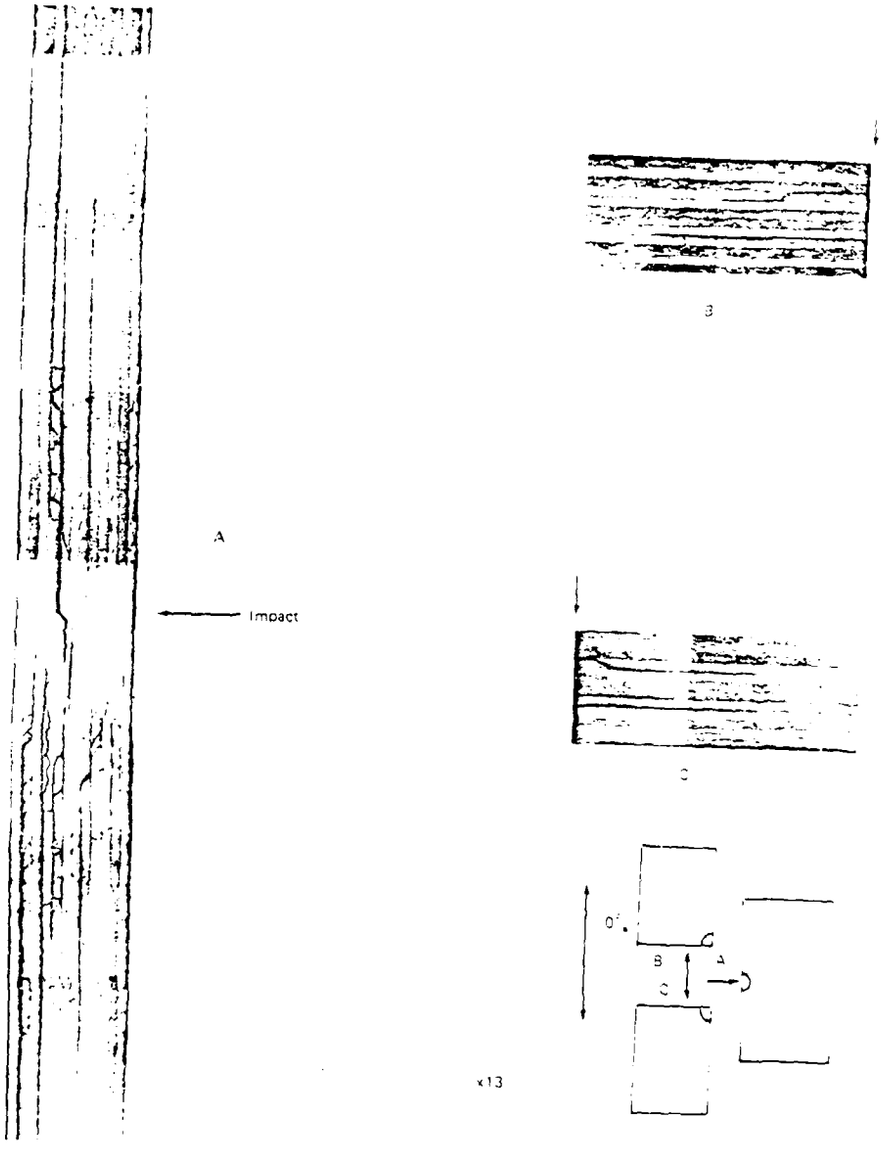

Fig 10 Cross sections through the area of damage caused by 3 J incident dropweight energy on a $[0\ 90\ 0\ \cdot 45\ 0]_s$ carbon fibre laminate (ONERA)

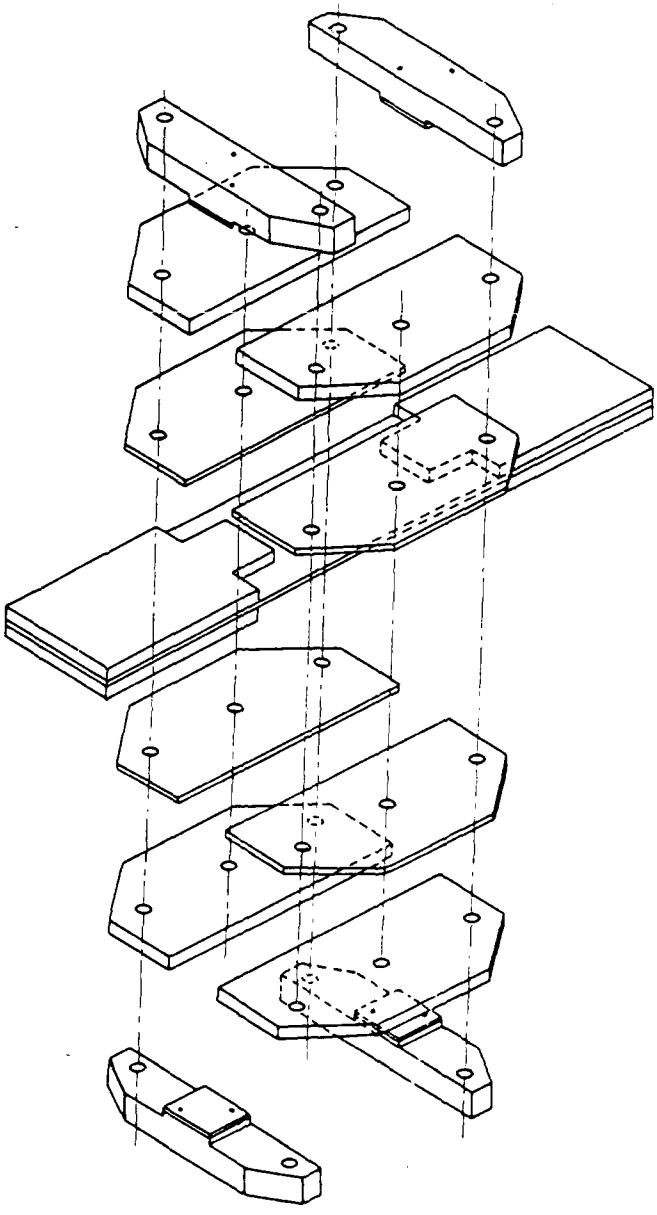

TR 84049

Fig 11 Exploded view of DFVLR anti-buckling device

Fig 12

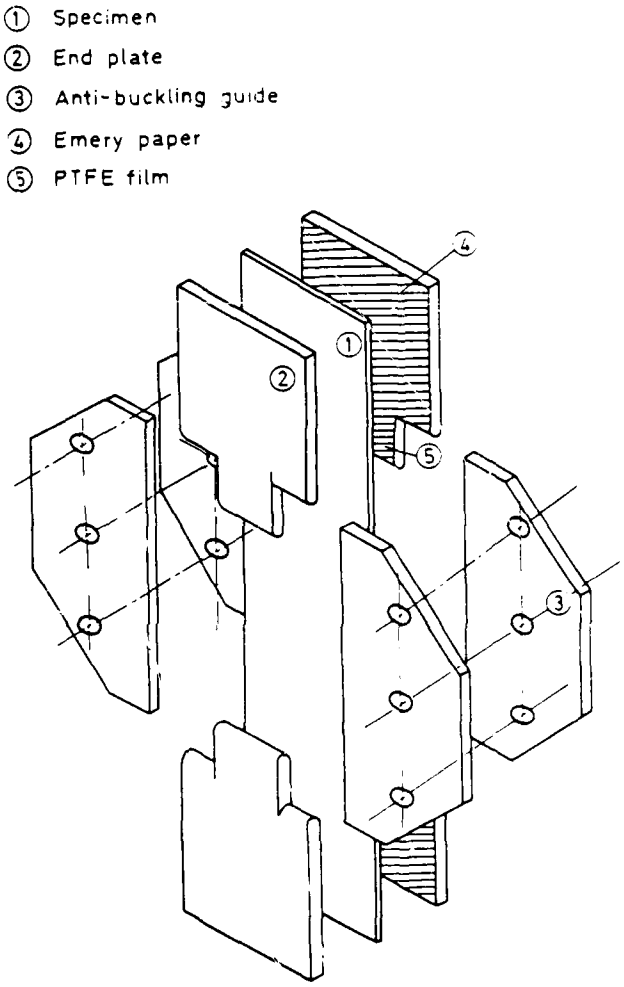

Fig 12 Exploded view of ONERA anti-buckling device

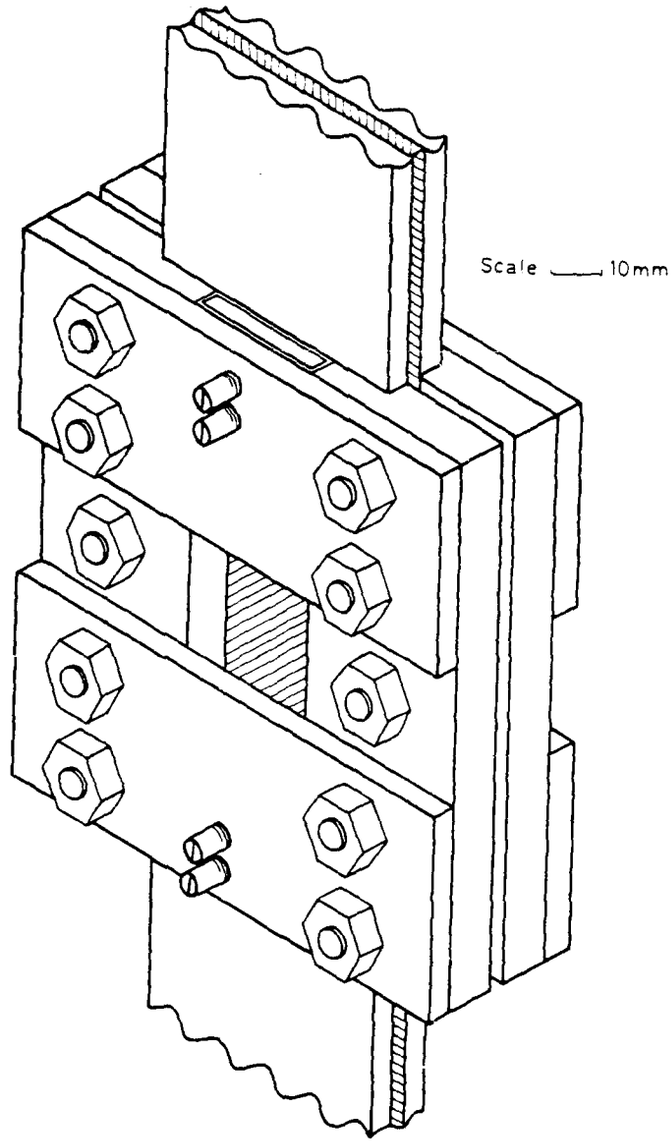

TR 84049

Fig 13 Assembled view of RAE anti-buckling device

Fig 14

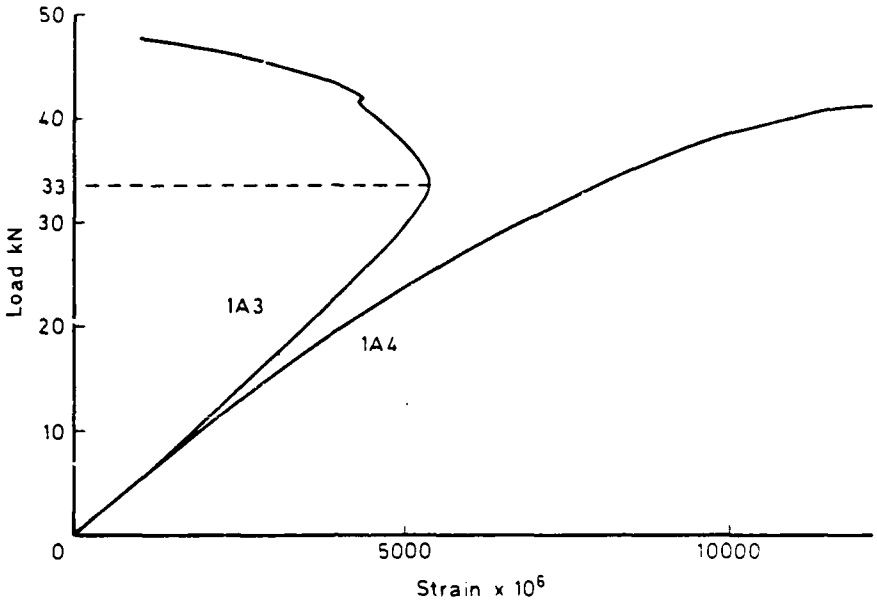

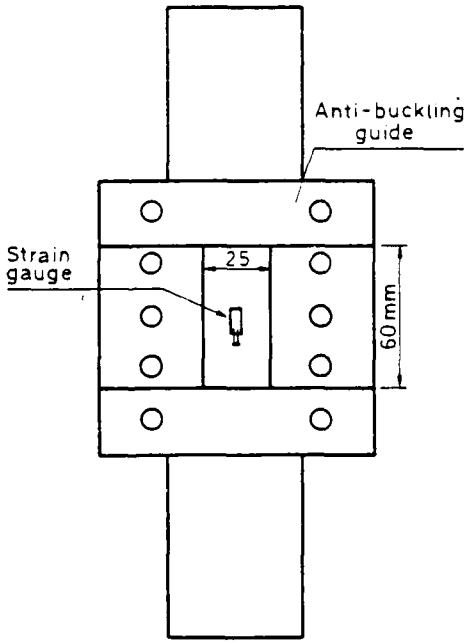

Fig 14 NLR anti-buckling device and load-strain curves of specimens tested in compression

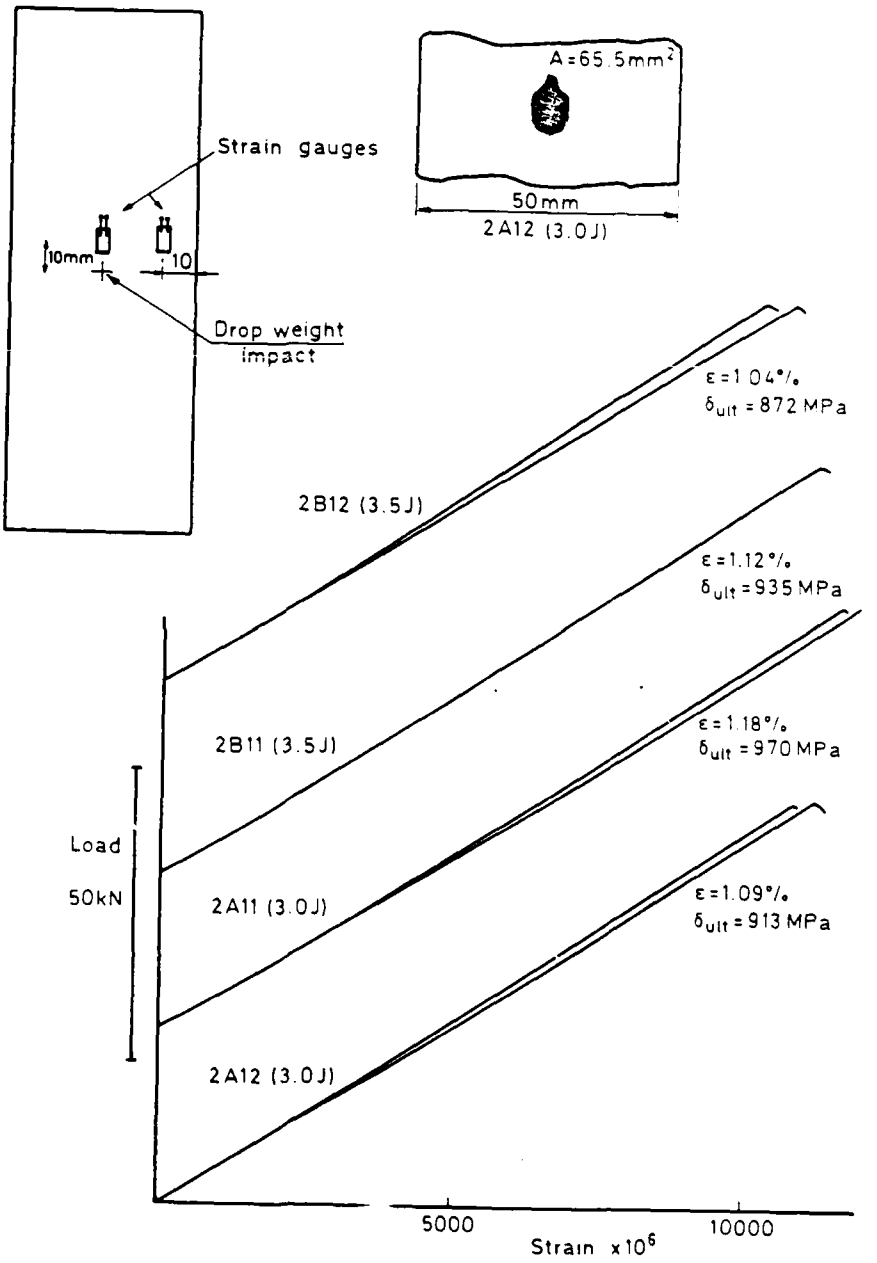

TR 84049

Fig 15 Load-strain curves of impact damaged specimens tested in tension and a typical C-scan of the damage (NLR)

Fig 16

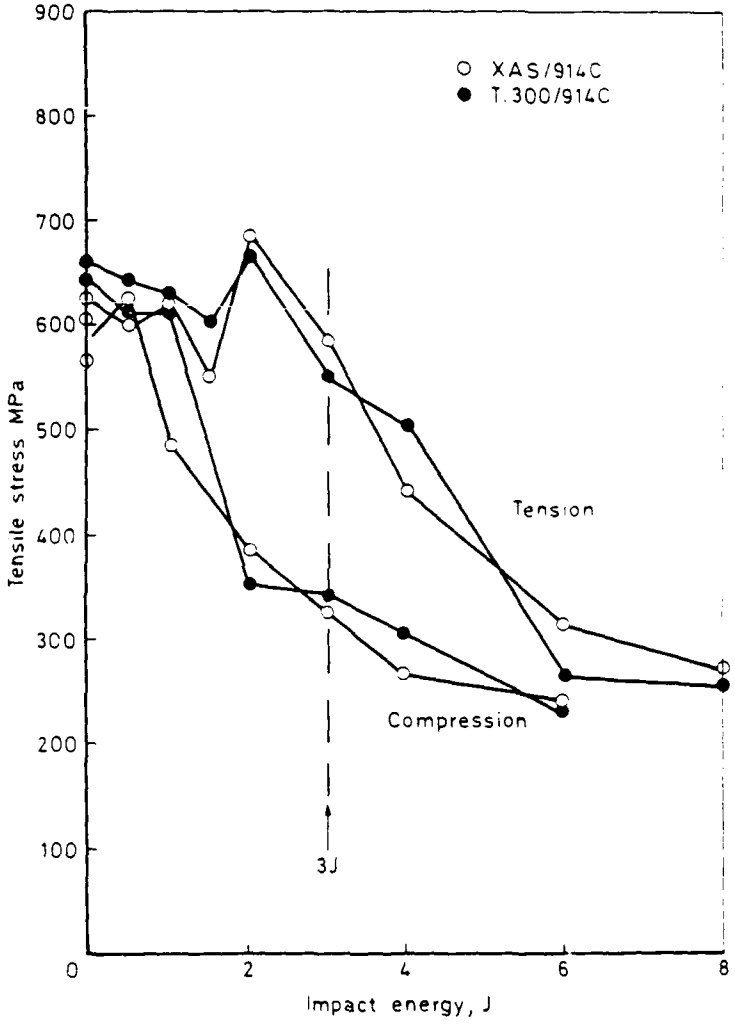

Fig 16 Effect of dropweight impact on the residual tensile and compressive strengths of $[0\ 90\ 0\ \pm 45\ 0]_s$ carbon fibre laminates (RAE)

TR 84049

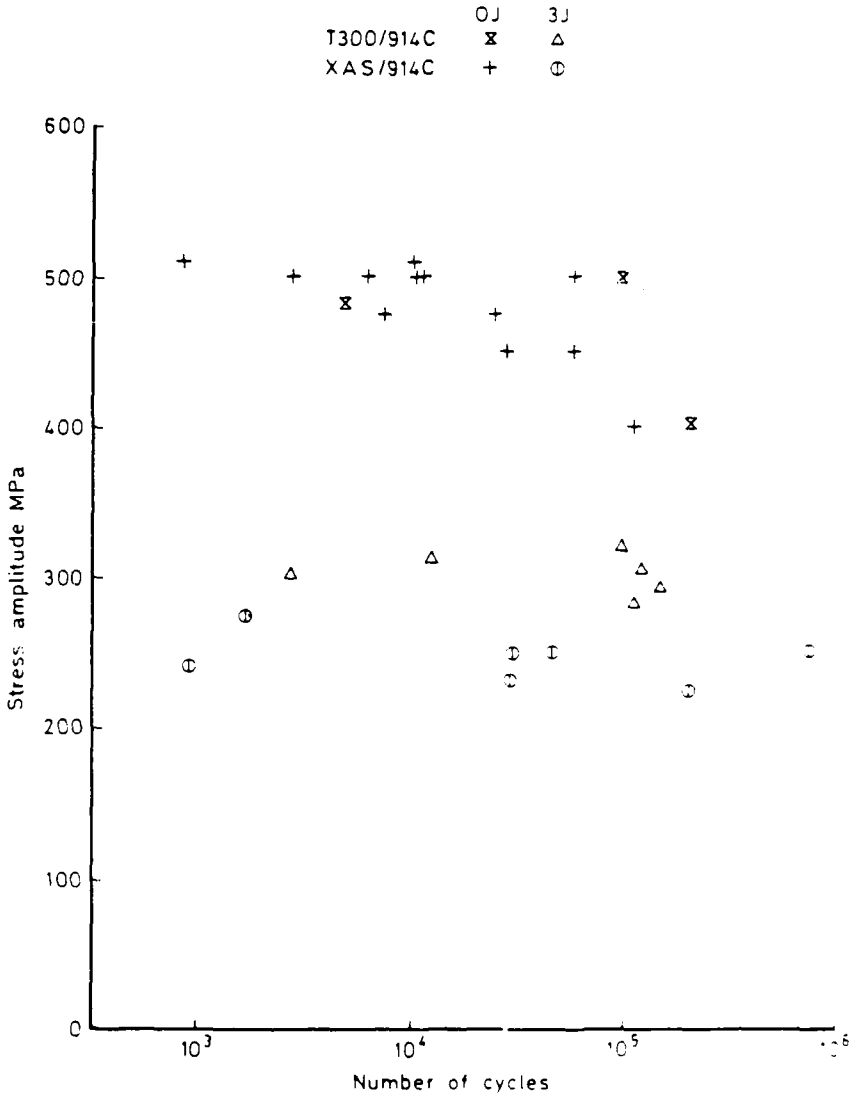

Fig 17 Fatigue curves (R = −1) for undamaged and impact damaged $[0\ 90\ 0\ \pm 45\ 0]_s$ carbon fibre laminates (RAE)

TR 84049

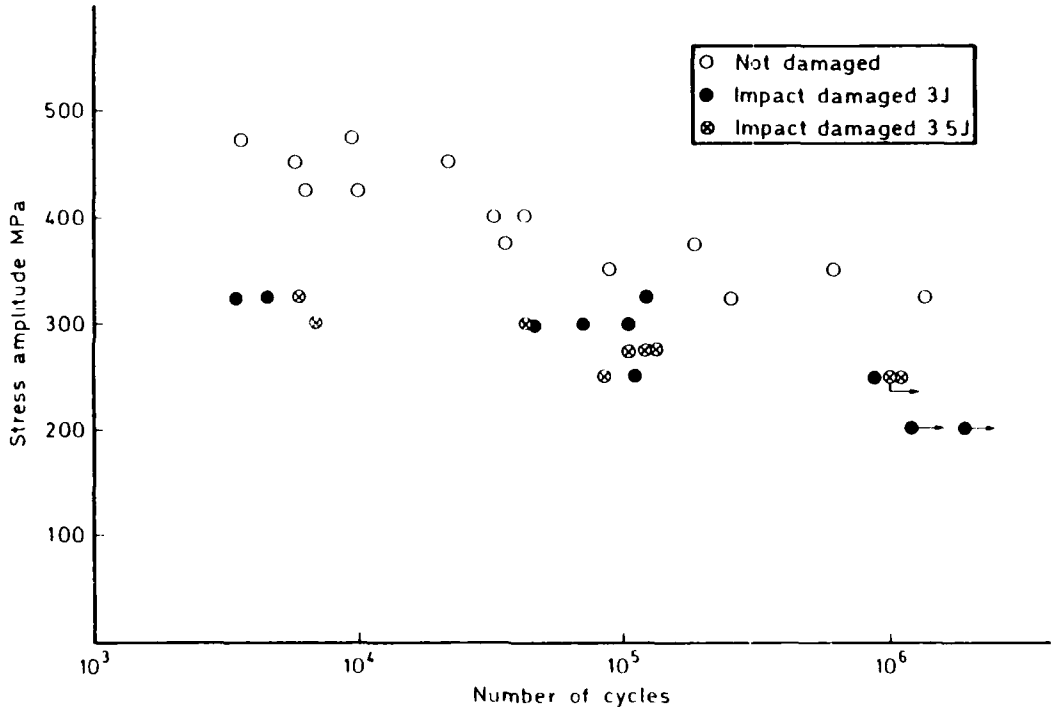

Fig 18 Fatigue curves (R = 1) for undamaged and impact damaged $[0\ 90\ 0\ \pm 45\ 0]_s$ carbon fibre laminates (NLR)

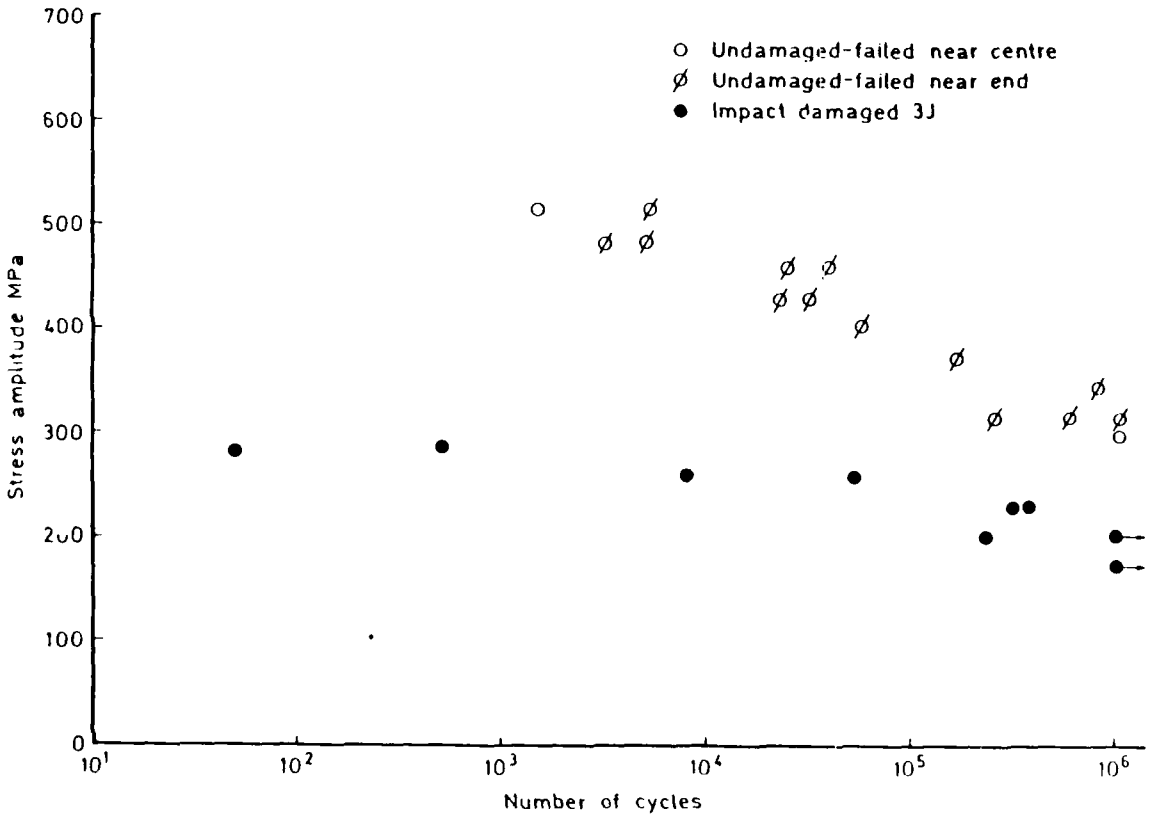

Fig 19 Fatigue curves (R = 1) for undamaged and impact damaged $[0/90/0/\pm 45/0]_s$ carbon fibre laminates (ONERA)

Fig 20

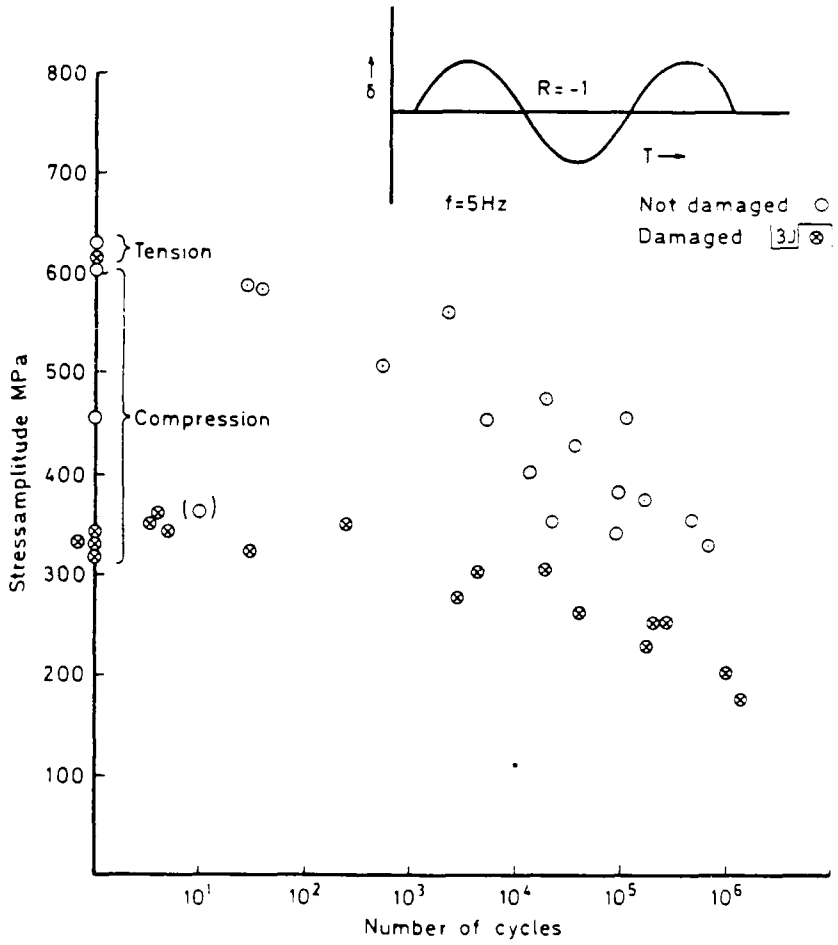

⊙ T pieces restrained from out-of-plane movement

Fig 20 Fatigue curves (R = −1) for undamaged and impact damaged $[0\ 90\ 0\ \pm 45\ 0]_s$ carbon fibre laminates (DFVLR)

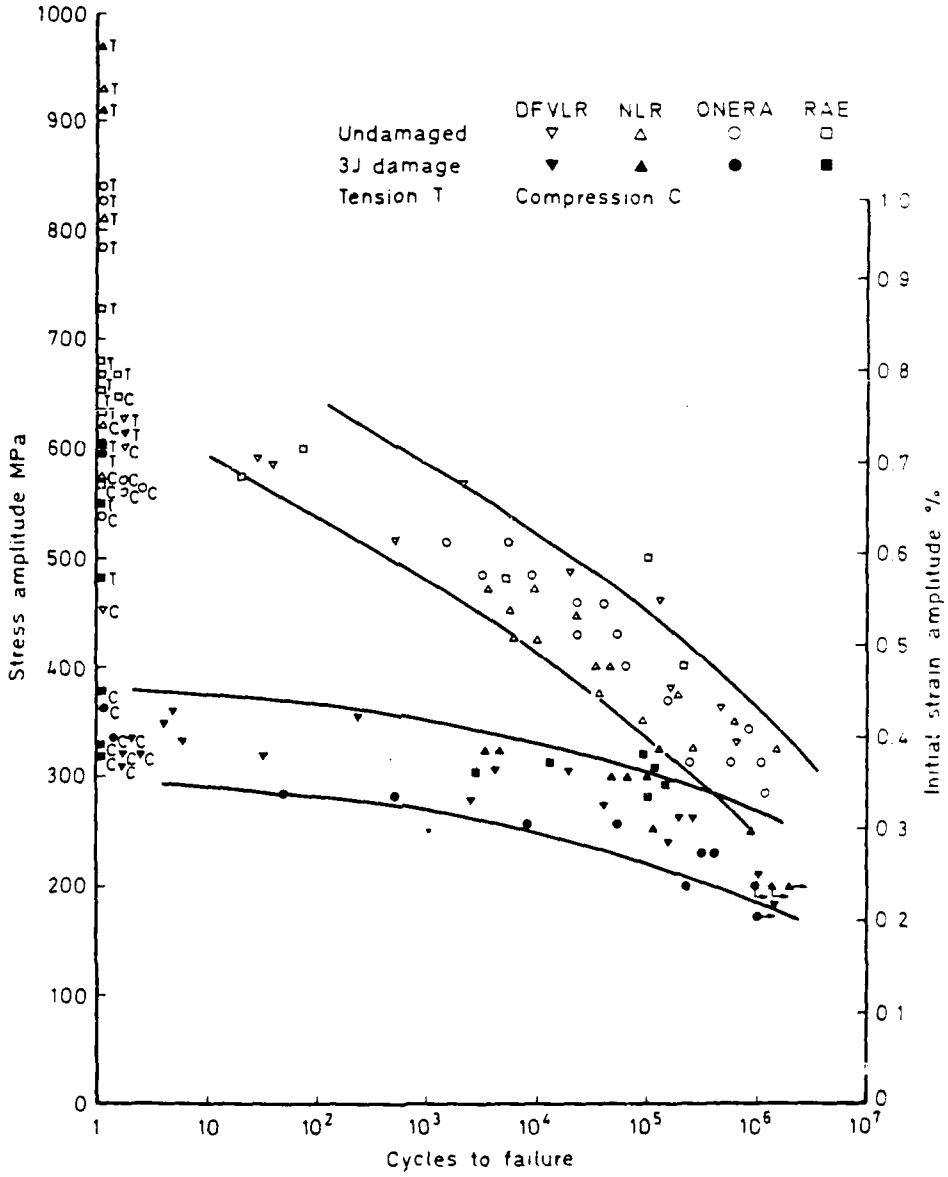

Fig 21 Combined fatigue results (R = −1) from the four laboratories for undamaged and impact damaged $[0\ 90\ 0\ \pm 45\ 0]_s$ carbon fibre laminates

TR 84049

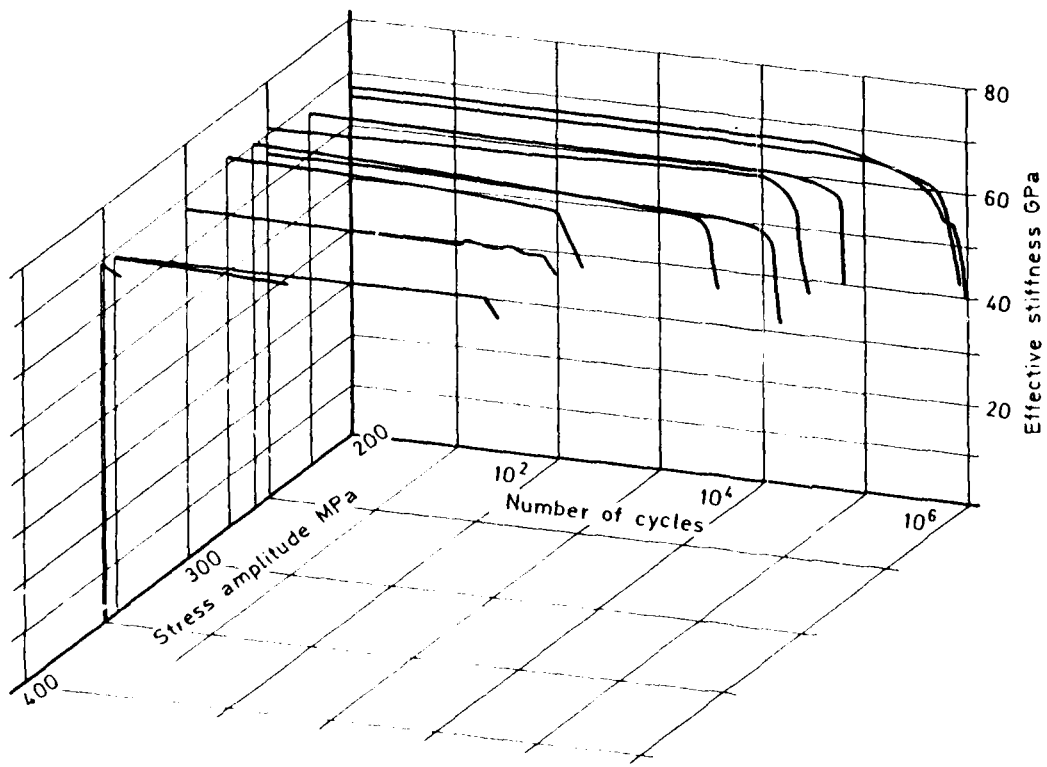

Fig 22 Loss in stiffness during fully reversed fatigue loading of impact damaged (3J) $[0\ 90\ 0\ \pm 45\ 0]_s$ carbon fibre laminates (DFVLR)

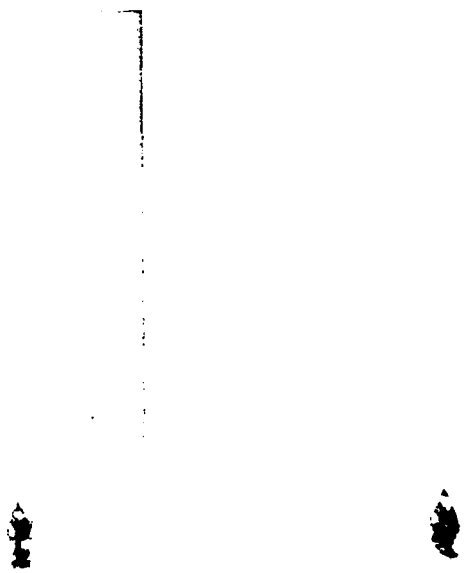

Specimen BAB 1 15
3 J damage
0 cycle

Specimen BAB 1 3
3 J damage
10^6 cycles at ±200 MPa

TH 84049 C18847

Fig 23 Examination of damaged laminates using X-rays and radio-opaque dye (ONERA)

Fig 24

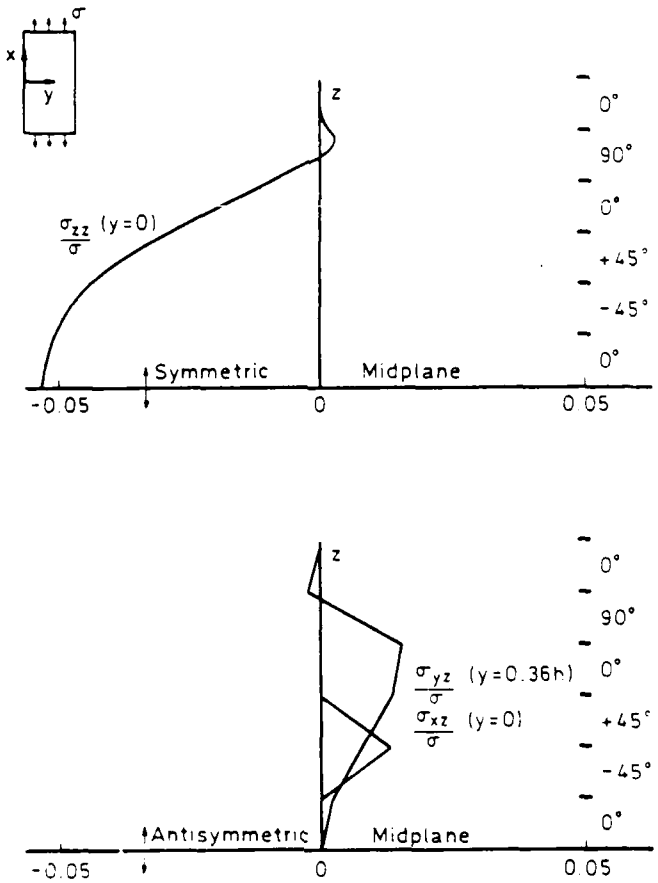

Fig 24 Calculated stresses at the edge of a $[0\ 90\ 0\ \pm 45\ 0]_s$ carbon fibre laminate (ONERA)

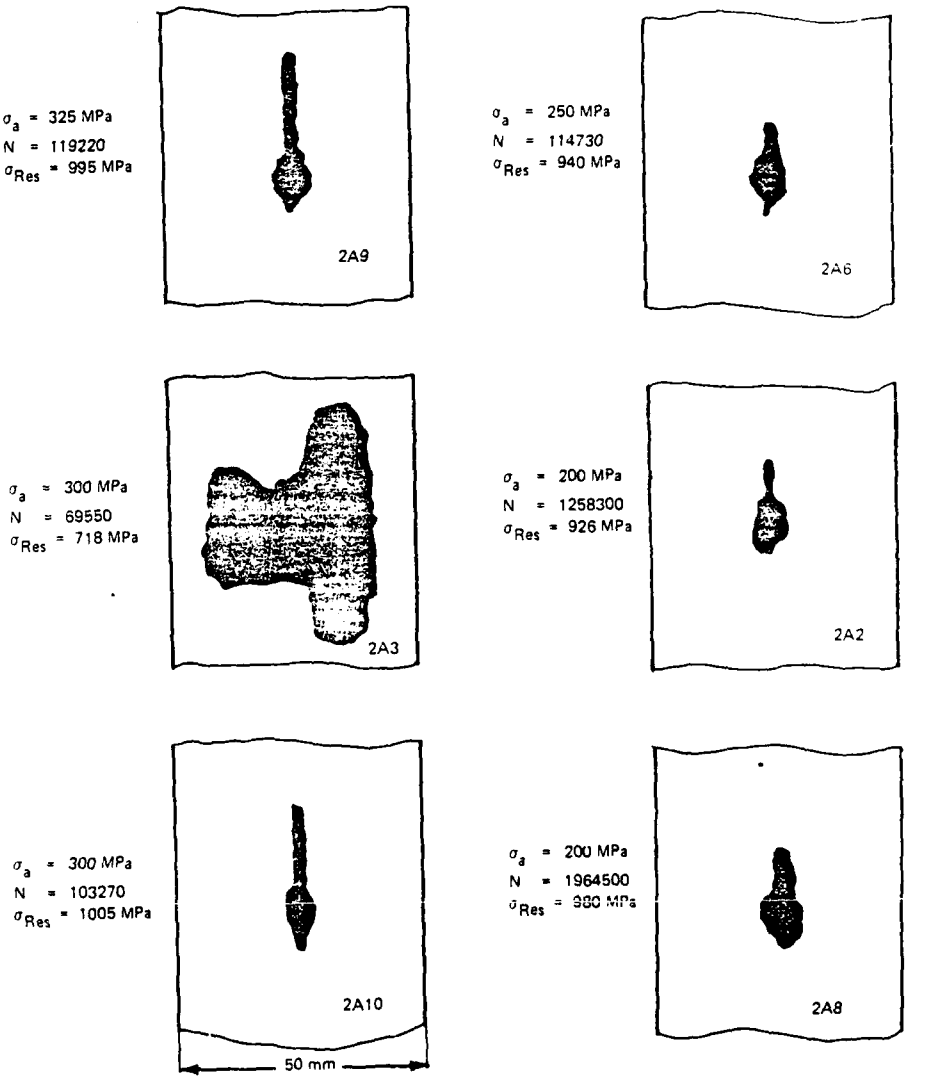

Fig 25 Ultrasonic C-scans of damage after fatigue loading showing limited damage growth (NLR)

TR 84049 C18443

Fig 26

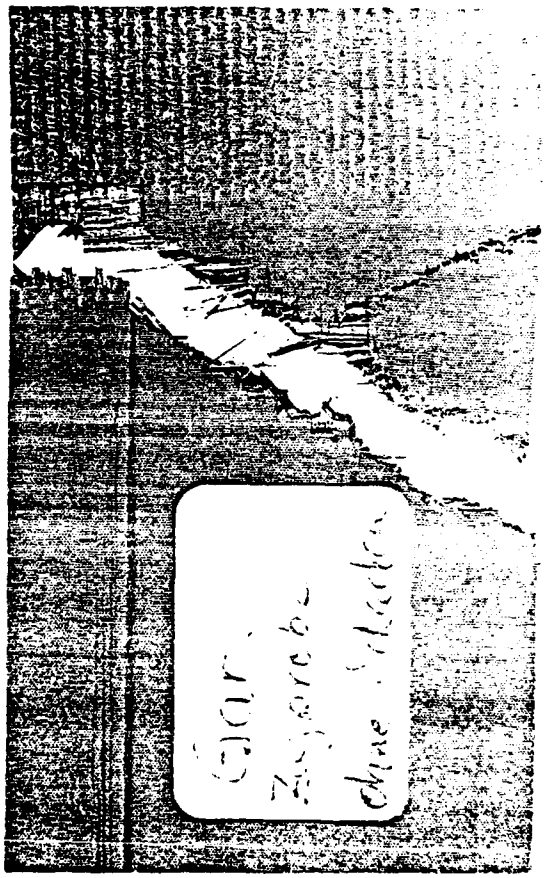

Fig 26 Static tensile failure in a $[0\ 90\ 0\ \pm 45\ 0]_s$ carbon fibre laminate (DFVLR)

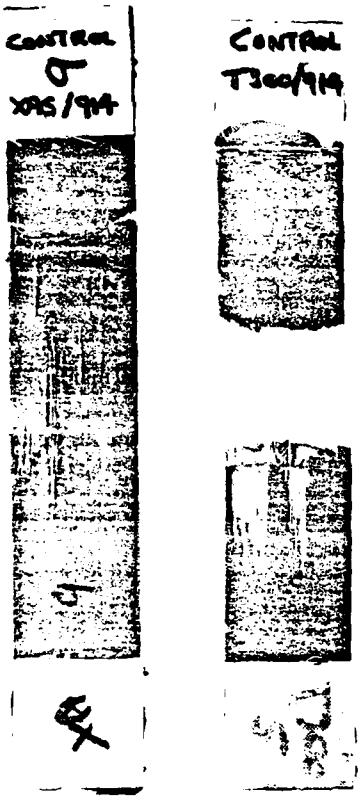

XAS/914C T300/914C

Fig 27 Static tensile failures in $[0\ 90\ 0\ \pm 45\ 0]_s$ carbon fibre laminates (RAE)

TR 84049 C18435

Fig 28

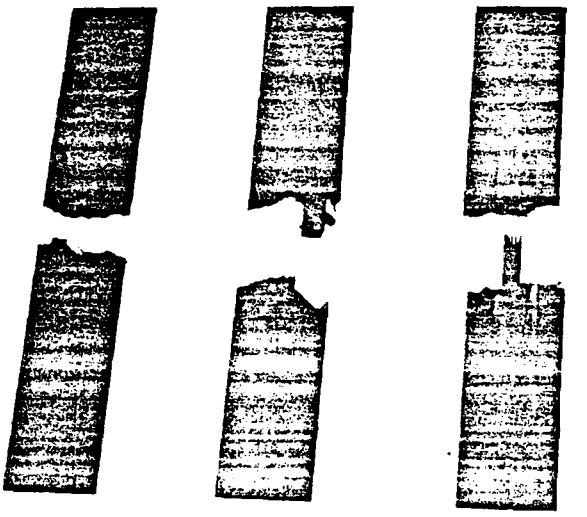

BAB 1 H3
damaged
static tension

BAB 1 K1
undamaged
static tension

BAB 1 L4
undamaged
fatigue tension/compression
1480 cycles at ±514 MPa

Fig 28 Failed test specimens of $[0\ 90\ 0\ \pm 45\ 0]_s$ carbon fibre laminates (ONERA)

TR 84049 C1844b

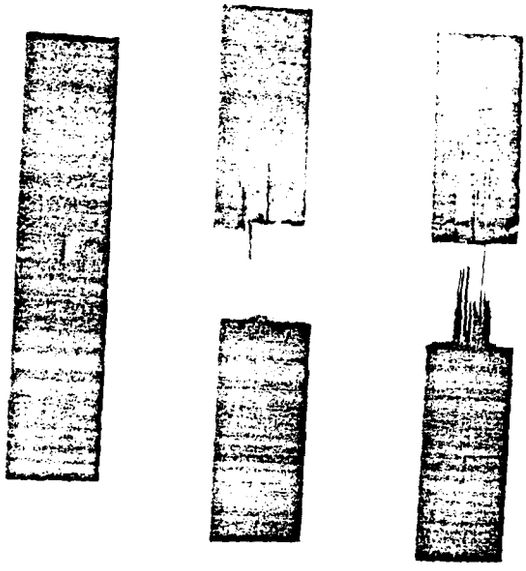

BAB 1 I5
damaged
static compression

BAB 1 J5
damaged
static compression
and then pulled
apart in tension

BAB 1 G5
damaged
fatigue tension/compression
50 cycles at ±270 MPa

TH 84049 C18447

Fig 29 Failed test specimens of $[0\ 90\ 0\ \pm 45\ 0]_s$ carbon fibre laminates (ONERA)

Fig 30

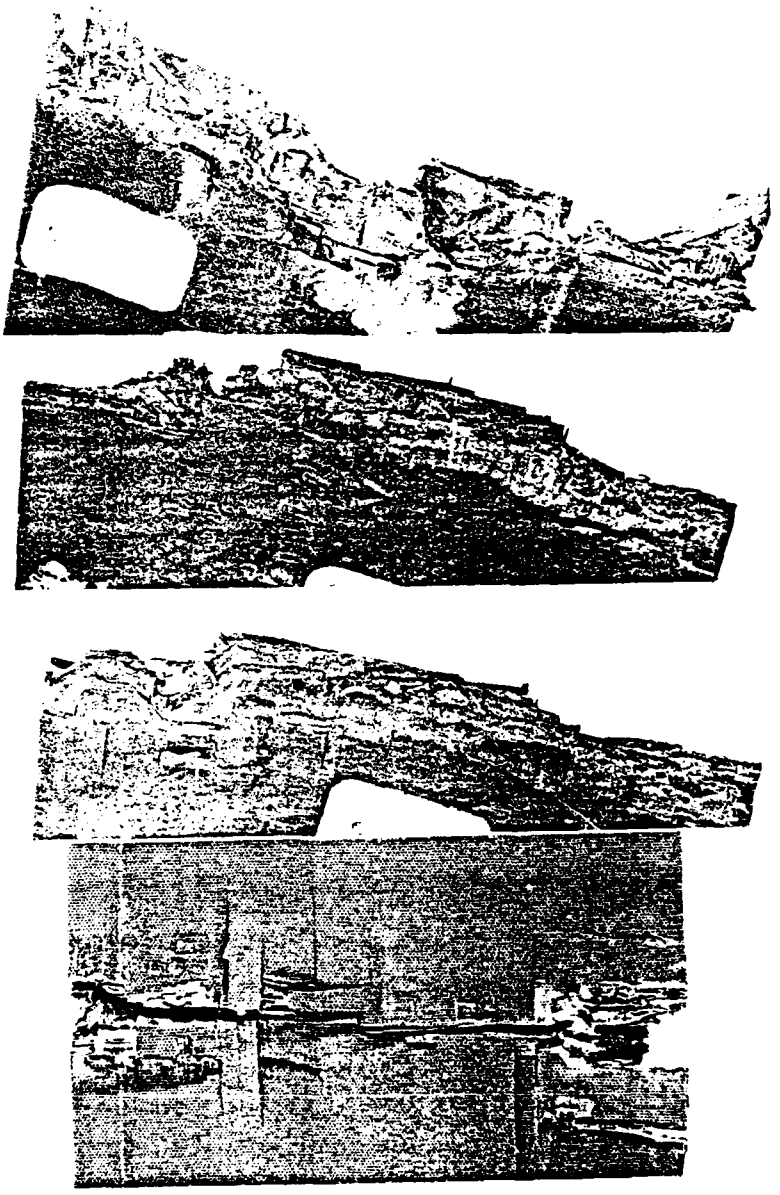

Fig 30 *Fracture surfaces from non-impacted* $[0\ 90\ 0\ \pm 45\ 0]_s$ carbon fibre laminates tested in tension/compression fatigue (DFVLR)

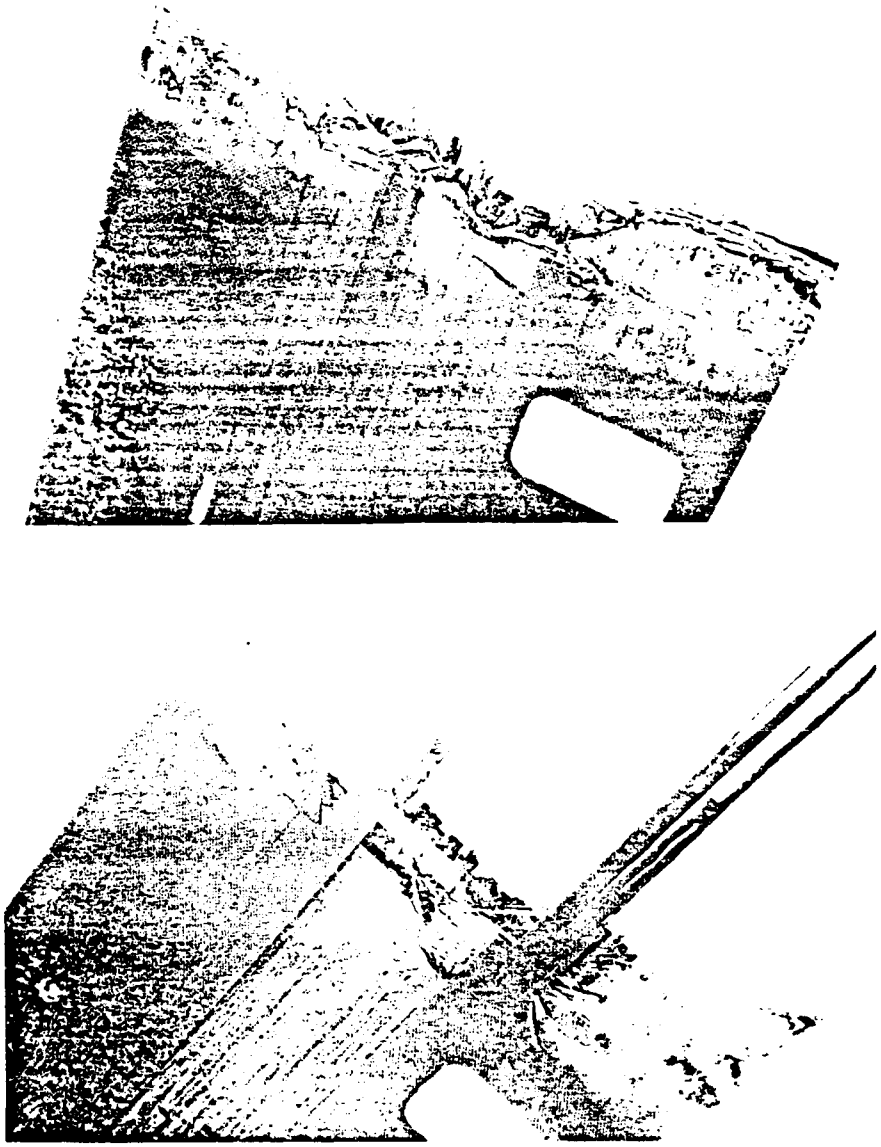

Fig 31 Fracture surfaces of impact damaged $[0\ 90\ 0\ \pm 45\ 0]_s$ carbon fibre laminates subsequently tested in tension/compression fatigue (DFVLR)

TR 84049 C18449

REPORT DOCUMENTATION PAGE

Overall security classification of this page

UNLIMITED

As far as possible this page should contain only unclassified information. If it is necessary to enter classified information, the box above must be marked to indicate the classification, e.g. Restricted, Confidential or Secret.

1. DRIC Reference (to be added by DRIC)	2. Originator's Reference	3. Agency Reference	4. Report Security Classification/Marking
	RAE TR 84049 GARTEUR TP-007	N/A	UNLIMITED

5. DRIC Code for Originator	6. Originator (Corporate Author) Name and Location
7673000W	Royal Aircraft Establishment, Farnborough, Hants, UK
5a. Sponsoring Agency's Code	**6a. Sponsoring Agency (Contract Authority) Name and Location**
N/A	N/A

7. Title
Impact damage tolerance of a carbon fibre composite laminate

7a. (For Translations) Title in Foreign Language

7b. (For Conference Papers) Title, Place and Date of Conference

8. Author 1. Surname, Initials	9a. Author 2	9b. Authors 3, 4	10. Date	Pages	Refs.
Dorey G.	Sigety P.	Stellbrink K. Hart 't W.G.J.	May 1984	46	8

11. Contract Number	12. Period	13. Project	14. Other Reference Nos.
N/A	N/A		Mat/Struct 85

15. Distribution statement
(a) Controlled by –
(b) Special limitations (if any) –

16. Descriptors (Keywords) (Descriptors marked * are selected from TEST)
Carbon fibre, Composite material, Impact, Fatigue, Residual strength, Barely visible impact damage.

17. Abstract

An investigation was carried out, under the auspices of GARTEUR, at four European aerospace research establishments as the first phase of a collaborative research programme on impact damage tolerance of composite materials. Laminates, from a common batch of material and having a [0 90 0 ±45 0]$_s$ lay-up, were impacted by dropweight and residual strengths were measured under fully reversed loading for specimens containing barely visible impact damage. The impact damage significantly reduced the static compressive strength but subsequent fatigue loading produced little further reduction in strength and the fatigue strength at 10^6 cycles was similar to that for non-impacted specimens. All four establishments produced similar results and in Phase 2 they will study in more detail a wider range of materials and test parameters. (Key words!)

RAE Form A143

END

DATE
FILMED

2 88